TENDER DOCUMENTS
for
DINGWALL WATER TANK DEMOLITION
MUNICIPALITY OF VICTORIA COUNTY

PROJECT 25-15

Prepared by:

Strait Engineering Limited

Date:

May, 2025

TABLE OF CONTENTS

1.0 TENDER INFORMATION

.1	Project Information	1
.2	Instructions to Bidders	6
.3	Contract Form CCDC-2 Stipulated Price Contract	7
.4	CCDC41 – CCDC Insurance Requirements	1
.5	Definitions	2
.6	General Conditions of Stipulated Price Contract	21

2.0 BID FORM (loose attachment)

.1	CCDC-10 Stipulated Price Bid Form	7

DIVISION 00-01 - GENERAL REQUIREMENTS:

Section 00 01 05	General Instructions	3
Section 01 11 00	Summary of Work	3
Section 01 33 00	Submittal Procedures	5
Section 01 35 29.06	Health and Safety Requirements	4
Section 01 35 43	Environmental Procedures	4
Section 01 56 00	Temporary Barriers and Enclosures	2
Section 01 77 00	Closeout Procedures	2

DIVISION 32 – EXTERIOR IMPROVEMENTS:

Section 02 41 16.09	Structure Demolition – Short Form	3

LIST OF DRAWINGS:

9	Reservoir Site Plan and Details
10	Reservoir Foundation Plan
11	Reservoir Details

ATTACHMENTS:

A	Lead Paint Assessment prepared by All-Tech May 7th, 2025

PROJECT INFORMATION

1.0 Project Name

Dingwall Water Tank Demolition
Victoria County
Project No. 25-15

2.0 Project Location

244 Dingwall Road
Victoria, NS

3.0 Project Description

The work under this project shall generally comprise but not necessarily be limited to provision of all labour, materials, and equipment for this demolition project. Work included under this project consists of the demolition of the existing Dingwall Water tank and removal from site. Included in the scope of work is infilling of the drain pipe within the foundation, cutting the tank steel anchor bolts flush and site cleanup/grading/restoration.

4.0 Owner

Municipality of Victoria County
495 Chebucto Street
Baddeck, Nova Scotia
B0E 1B0

Telephone: (902) 295-3667
Contact Person: Ms. Kelly Brett

5.0 Consultant

Strait Engineering Limited
298 Reeves Street, Unit 9
Port Hawkesbury, Nova Scotia
B9A 2B4

Telephone: (902) 625-3631 FAX: (902) 625-3634
Contact Person: Mr. Darryl Myette, P.Eng.

INSTRUCTIONS TO BIDDERS

1.0 TENDER CALL

Sealed tenders clearly marked with name and full address of bidder and name of project are invited from the contractors and will be received at the office below or by email to kelly.brett@victoriacounty.ca:

Municipality of Victoria County
PO Box 370
495 Chebucto Street
Baddeck, Nova Scotia
B0E 1B0

Telephone: (902) 295-3667
Contact Person: Ms. Kelly Brett

Tenders will be received up until 2:30 pm local time on June, 18th , 2025.

Each tender must be accompanied by a certified cheque in the amount of 10% of the bid amount or a Bid Bond in the amount of 10% of the bid amount and a Consent of Surety for the required fifty percent (50%) Performance Bond and fifty percent (50%) Labour and Materials Bond.

2.0 DOCUMENT DEPOSIT

Digital copies of Contract Documents are available free of charge, please reach out to kcleary@straiteng.com. Hard copies of Contract Documents are available upon request at Strait Engineering Limited for a non-refundable charge of $40.00.

3.0 EXAMINATION

Bidders shall examine all documents and shall visit and carefully examine all conditions which affect the site and the work to be done therein.

No payments for extra work shall be allowed to the Contractor for conditions which could be determined by examination of the tender documents and the site.

4.0 TENDER PREPARATION

The Contractors shall submit tenders on CCDC-10 Stipulated Price Bid Form provided and fully completed. All value added taxes shall be **excluded** in the Contractor's Stipulated Price Bid amount.

Tenders shall cover the execution of the whole work described in the Specifications, shown on the drawings or directed in the addenda.

One copy of the Contractor's tender shall be submitted duly signed by an authorized officer of the firm tendering prior to witnessing and submission.

One written amendment advice to the Contractor's tender (including facsimile) may be submitted, provided that both original tender and amendment advice are received prior to tender closing time. The amendment advice shall clearly show each resultant price differential as a deduction from or addition to the corresponding original tender item(s).

5.0 TENDER OPENING

Tenders will be opened at 2:30 pm local time on June 18th, 2025 at 495 Chebucto Street, Baddeck, Nova Scotia. Opening will not be public.

6.0 ACCEPTABILITY OF TENDERS

Tenders that are unsigned, incomplete, conditional, illegible, unbalanced, obscure, or that contain additions not called for, reservations, erasures, alterations, or irregularities of any kind, may be rejected as informal. Tenders must be made on the form provided.

The Owner reserves the right to waive any irregularity or insufficiency and to accept the Tender which it deems most advantageous.

The Owner will not be responsible for any liabilities, costs, expenses, loss or damage incurred, sustained or suffered by any Tenderer prior to or subsequent to or by reason of the acceptance or the non-acceptance of a Tender.

7.0 DISCREPANCIES

Should, during examination of drawings and specifications, or after visit to site any discrepancies, omissions, ambiguities, or conflicts to or among Contract Documents, or doubt as to their meaning, bring question to the attention of the Project Consultant before tender closing date. Notify Consultant no less than three (3) working days before Tender Closing. The Project Officer will review questions and where information sought is not clearly indicated or specified, will have issued a clarifying Addenda which will become a part of the Tender documents. Neither Owner nor Consultant will be responsible for any oral instructions.

8.0 AMENDMENT OR WITHDRAWAL OF TENDER

Tenders may be amended or withdrawn by letter or email to kelly.brett@victoriacounty.ca.

Amendment of individual unit prices is the only acceptable price amendment. Amendments shall not disclose either original or revised total price.

Head amendments or withdrawal as follows: "[Amendment]/[Withdrawal] of Tender for [Name of Project] [Contract Number]". Sign and seal as required for Tender, and submit at address given for receipt of Tenders prior to time of Tender closing.

9.0 OWNERS RIGHTS

The right to reject any or all tenders or to accept any tender deemed most satisfactory is reserved by the Owner who also reserves the right to waive any minor informality in any or all tenders.

The Owner may require each bidder to submit evidence of his and his proposed subcontractors, experience and capabilities in similar work previously executed.

The Owner shall have the right to take possession of any particular portion of the site upon completion of same during construction providing that such possession shall not necessarily constitute acceptance of that part of the work.

10.0 CONTRACT FORM

The contract between Owner and Contractor shall be CCDC-2 Stipulated Price Contract and is shown elsewhere in these documents for information only and shall not be completed by Tenderers at the time of submitting their tender. The standard CCDC-2 General Conditions which apply and forms part of the total contract are standard.

The successful tenderer shall execute and complete CCDC-2 Stipulated Price Contract, and commence work immediately.

11.0 LABOUR STANDARDS

"The provisions of Labour Standards Arrangement" proposed by the Federal Department of Labour shall be applicable to this contract, it being understood and agreed that to the extent there are higher provincial standards applicable to particular occupations or regions, these higher provincial standards shall apply. In the aforesaid Labour Standards Arrangement the following provisions are regarded as minimum requirements.

Rates of pay prevailing in the area of employment for each classification of work, subject to the minimum wage specified in provincial legislation for Industrial Sites.

In building construction, time and one half the specified prevailing rate of pay after the hours stipulated for purposes of overtime payment in the relevant provincial standards, which shall in no case be more than 48 per week.

Labour conditions to be specified in all tendering documents and to be posted conspicuously in the work place.

12.0 PRICES QUOTED

The unit prices quoted for the project shall include the furnishing of all materials, supplies, construction tools, plant, equipment, labour and all incidentals necessary to perform and complete the work required to permit each item to function properly in the complete project. The

price shall also include profit and overhead and the cost of all incidental services supplied by the Contractor such as administration, general supervision, survey, temporary works, insurance, pre-construction inspection, etc.

Should it be necessary to do additional work under a Force Account, the General Conditions of Contract and Supplementary Conditions shall govern.

All Tenders shall be based upon the Drawings and Specifications issued by the Owner at the time of calling Tenders, and upon such Addenda and other Drawings as the Owner may issue during the period of tendering to all persons, firms or companies who have taken out a set of the Contract Documents.

Since the intention of the Plans and Specifications is to provide finished work, any items omitted there from, which are clearly necessary for the completion of the work or its appurtenances shall be considered a portion of the work though not directly specified and/or shown or called for on the plans.

13.0 COMPETENCY OF TENDERERS/REFERENCES

No tender will be considered from any Tenderer unless known to be skilled and regularly engaged in work of a character similar to that covered by the Drawings and Specifications. In order to aid the Owner in determining the responsibility of any Tenderer, a Tenderer will furnish evidence, satisfactory to the Owner, of the Tenderer's experience and familiarity with work of the character specified, and his financial ability to execute properly the proposed work to completion within the specified time.

Contractor shall provide three (3) references indicating the job type and the past experience for similar construction projects within the past five (5) years.

14.0 COMPLETION DATE

Time to complete all works is important and may be considered in the evaluation of tenders. This item must be completed in the Stipulated Price Bid Form.

15.0 INSURANCE

Provide a signed “Undertaking of Insurance” on a standard form provided by the insurance company stating their intention to provide insurance to the bidder in accordance with the insurance requirements of the Contract Documents. Insurance requirements shall meet CCDC-41 with the following exceptions: $2,000,000.00 minimum required for General Liability, Automobile and Pollution insurance. Aircraft and watercraft are no applicable for this Contract.

16.0 OFFER ACCEPTANCE/REJECTION

Bids shall remain open to acceptance and shall be irrevocable for a period of Thirty (30) days after the bid closing date.

The Owner reserves the right to accept or reject any or all offers.

After a bid has been accepted, all rejected bids will be returned to the respective bidders with submitted bid securities and other requested enclosures.

17.0 SAFETY CERTIFICATE OF RECOGNITION

All contractors interested in submitting bids in relation to the tender call must have or show proof that they are in the process of receiving a Certificate of Recognition issued jointly by Nova Scotia Construction Association and the Department of Labour or an equivalent certification.

18.0 WORKMANS COMPENSATION BOARD

All Contractors submitting bids shall submit a clearance letter from the WCB certifying they are in good standing.

CCDC 2

CCDC 2

Stipulated Price Contract

2020

VICTORIA COUNTY, DINGWALL WATER TANK DEMOLITION, PROJECT NO 25-15

Apply a CCDC 2 copyright seal here. The application of the seal demonstrates the intention of the party proposing the use of this document that it be an accurate and unamended form of CCDC 2 – 2020 except to the extent that any alterations, additions or modifications are set forth in supplementary conditions.

CANADIAN CONSTRUCTION DOCUMENTS COMMITTEE
CANADIAN CONSTRUCTION DOCUMENTS COMMITTEE
CANADIAN CONSTRUCTION DOCUMENTS COMMITTEE

CCDC 2 STIPULATED PRICE CONTRACT

TABLE OF CONTENTS

AGREEMENT BETWEEN OWNER AND CONTRACTOR
A-1 The Work
A-2 Agreements and Amendments
A-3 Contract Documents
A-4 Contract Price
A-5 Payment
A-6 Receipt of and Addresses for Notices in Writing
A-7 Language of the Contract
A-8 Succession

DEFINITIONS
Change Directive
Change Order
Construction Equipment
Consultant
Contract
Contract Documents
Contract Price
Contract Time
Contractor
Drawings
Notice in Writing
Owner
Other Contractor
Payment Legislation
Place of the Work
Product
Project
Ready-for-Takeover
Shop Drawings
Specifications
Subcontractor
Substantial Performance of the Work
Supplemental Instruction
Supplier
Temporary Work
Value Added Taxes
Work
Working Day

GENERAL CONDITIONS

PART 1 GENERAL PROVISIONS
GC 1.1 Contract Documents
GC 1.2 Law of the Contract
GC 1.3 Rights and Remedies
GC 1.4 Assignment

PART 2 ADMINISTRATION OF THE CONTRACT
GC 2.1 Authority of the Consultant
GC 2.2 Role of the Consultant
GC 2.3 Review and Inspection of the Work
GC 2.4 Defective Work

PART 3 EXECUTION OF THE WORK
GC 3.1 Control of the Work
GC 3.2 Construction by the Owner or Other Contractors
GC 3.3 Temporary Work
GC 3.4 Construction Schedule
GC 3.5 Supervision
GC 3.6 Subcontractors and Suppliers
GC 3.7 Labour and Products
GC 3.8 Shop Drawings

PART 4 ALLOWANCES
GC 4.1 Cash Allowances
GC 4.2 Contingency Allowance

PART 5 PAYMENT
GC 5.1 Financing Information Required of the Owner
GC 5.2 Applications for Payment
GC 5.3 Payment
GC 5.4 Substantial Performance of the Work and Payment of Holdback
GC 5.5 Final Payment
GC 5.6 Deferred Work
GC 5.7 Non-conforming Work

PART 6 CHANGES IN THE WORK
GC 6.1 Owner's Right to Make Changes
GC 6.2 Change Order
GC 6.3 Change Directive
GC 6.4 Concealed or Unknown Conditions
GC 6.5 Delays
GC 6.6 Claims for a Change in Contract Price

PART 7 DEFAULT NOTICE
GC 7.1 Owner's Right to Perform the Work, Terminate the Contractor's Right to Continue with the Work or Terminate the Contract
GC 7.2 Contractor's Right to Suspend the Work or Terminate the Contract

PART 8 DISPUTE RESOLUTION
GC 8.1 Authority of the Consultant
GC 8.2 Adjudication
GC 8.3 Negotiation, Mediation and Arbitration
GC 8.4 Retention of Rights

PART 9 PROTECTION OF PERSONS AND PROPERTY
GC 9.1 Protection of Work and Property
GC 9.2 Toxic and Hazardous Substances
GC 9.3 Artifacts and Fossils
GC 9.4 Construction Safety
GC 9.5 Mould

PART 10 GOVERNING REGULATIONS
GC 10.1 Taxes and Duties
GC 10.2 Laws, Notices, Permits, and Fees
GC 10.3 Patent Fees
GC 10.4 Workers' Compensation

PART 11 INSURANCE
GC 11.1 Insurance

PART 12 OWNER TAKEOVER
GC 12.1 Ready-for-Takeover
GC 12.2 Early Occupancy by the Owner
GC 12.3 Warranty

PART 13 INDEMNIFICATION AND WAIVER
GC 13.1 Indemnification
GC 13.2 Waiver of Claims

CCDC 2 is the product of a consensus-building process aimed at balancing the interests of all parties on the construction project. It reflects recommended industry practices. The CCDC and its constituent member organizations do not accept any responsibility or liability for loss or damage which may be suffered as a result of the use or interpretation of CCDC 2.

CCDC Copyright 2020
Must not be copied in whole or in part without the written permission of the CCDC.

AGREEMENT BETWEEN OWNER AND CONTRACTOR
For use when a stipulated price is the basis of payment.

This Agreement made on day of in the year 2025 .
by and between the parties

VICTORIA COUNTY

hereinafter called the "*Owner"*

and

hereinafter called the "*Contractor*"

The *Owner* and the *Contractor* agree as follows:

ARTICLE A-1 THE WORK

The *Contractor* shall:

1.1 perform the *Work* required by the *Contract Documents* for *(insert below the description or title of the Work)*

DINGWALL WATER TANK DEMOLITION

located at *(insert below the Place of the Work)*

244 DINGWALL RD, VICTORIA COUNTY

for which the Agreement has been signed by the parties, and for which *(insert below the name of the Consultant)*

STRAIT ENGINEERING LIMITED

is acting as and is hereinafter called the "*Consultant*" and

1.2 do and fulfill everything indicated by the *Contract Documents*, and

1.3 commence the *Work* by the day of in the year 2025 and, subject to adjustment in *Contract Time* as provided for in the *Contract Documents*, attain *Ready-for-Takeover*, by the day of in the year 2025 .

ARTICLE A-2 AGREEMENTS AND AMENDMENTS

2.1 The *Contract* supersedes all prior negotiations, representations or agreements, either written or oral, relating in any manner to the *Work*, including the bid documents that are not expressly listed in Article A-3 of the Agreement – CONTRACT DOCUMENTS.

2.2 The *Contract* may be amended only as provided in the *Contract Documents*.

Note: This contract is protected by copyright. Use of a CCDC 2 document not containing a CCDC 2 copyright seal constitutes an infringement of copyright. Only sign this contract if the document cover page bears a CCDC 2 copyright seal to demonstrate that it is intended by the parties to be an accurate and unamended version of CCDC 2 – 2020 except to the extent that any alterations, additions or modifications are set forth in supplementary conditions.

ARTICLE A-3 CONTRACT DOCUMENTS

3.1 The following are the *Contract Documents* referred to in Article A-1 of the Agreement – THE WORK:

- Agreement between *Owner* and *Contractor*
- Definitions
- General Conditions

*

1.0 TENDER INFORMATION

.1 Project Information....1
.2 Instructions to Bidders....5
.3 Contract For CCDC2 - Stipulated Price Contract....8
.4 Definitions.... 2
.5 General Conditions of Stipulated Price Contract....21

2.0 BID FORM (loose attachment)

.1 CCDC-2 Stipulated Bid Form (For Bid Submission)....8

DIVISION 00-01 - GENERAL REQUIREMENTS:

Section 00 01 05	General Instructions	2
Section 01 11 00	Summary of Work	3
Section 01 33 00	Submittal Procedures	5
Section 01 35 29.06	Health and Safety Requirements	4
Section 01 35 43	Environmental Procedures	2
Section 01 56 00	Temporary Barriers and Enclosures	2
Section 01 77 00	Closeout Procedures	2

DIVISION 00-02 - EXISTING CONDITIONS:

Section 02 41 16.09	Structure Demolition - Short Form	6

LIST OF DRAWINGS:

9	RESERVOIR SITE PLAN AND DETAILS
10	RESERVOIR FOUNDATION PLAN
11	RESERVOIR DETAILS

LIST OF ATTACHMENTS:

A	LEAD PAINT ASSESSMENT REPORT

* *(Insert here, attaching additional pages if required, a list identifying all other Contract Documents e.g. supplementary conditions; Division 01 of the Specifications – GENERAL REQUIREMENTS; Project information that the Contractor may rely upon; technical Specifications, giving a list of contents with section numbers and titles, number of pages and date; material finishing schedules; Drawings, giving drawing number, title, date, revision date or mark; addenda, giving title, number, date; time schedule)*

Note: This contract is protected by copyright. Use of a CCDC 2 document not containing a CCDC 2 copyright seal constitutes an infringement of copyright. Only sign this contract if the document cover page bears a CCDC 2 copyright seal to demonstrate that it is intended by the parties to be an accurate and unamended version of CCDC 2 – 2020 except to the extent that any alterations, additions or modifications are set forth in supplementary conditions.

ARTICLE A-4 CONTRACT PRICE

4.1 The *Contract Price*, which excludes *Value Added Taxes*, is:

/100 dollars $

4.2 *Value Added Taxes* (of 14 %) payable by the *Owner* to the *Contractor* are:

/100 dollars $

4.3 Total amount payable by the *Owner* to the *Contractor* for the *Work* is:

/100 dollars $

4.4 These amounts shall be subject to adjustments as provided in the *Contract Documents*.

4.5 All amounts are in Canadian funds.

ARTICLE A-5 PAYMENT

5.1 Subject to the provisions of the *Contract Documents* and *Payment Legislation*, and in accordance with legislation and statutory regulations respecting holdback percentages, the *Owner* shall:

.1 make progress payments to the *Contractor* on account of the *Contract Price* when due in the amount certified by the *Consultant* unless otherwise prescribed by *Payment Legislation* together with such *Value Added Taxes* as may be applicable to such payments,

.2 upon *Substantial Performance of the Work*, pay to the *Contractor* the unpaid balance of the holdback amount when due together with such *Value Added Taxes* as may be applicable to such payment, and

.3 upon the issuance of the final certificate for payment, pay to the *Contractor* the unpaid balance of the *Contract Price* when due together with such *Value Added Taxes* as may be applicable to such payment.

5.2 Interest

.1 Should either party fail to make payments as they become due under the terms of the *Contract* or in an award by adjudication, arbitration or court, interest at the following rates on such unpaid amounts shall also become due and payable until payment:

(1) 2% per annum above the prime rate for the first 60 days.

(2) 4% per annum above the prime rate after the first 60 days.

Such interest shall be compounded on a monthly basis. The prime rate shall be the rate of interest quoted by

(Insert name of chartered lending institution whose prime rate is to be used)

BANK OF CANADA

for prime business loans as it may change from time to time.

.2 Interest shall apply at the rate and in the manner prescribed by paragraph 5.2.1 of this Article on the settlement amount of any claim in dispute that is resolved either pursuant to Part 8 of the General Conditions – DISPUTE RESOLUTION or otherwise, from the date the amount would have been due and payable under the *Contract*, had it not been in dispute, until the date it is paid.

ARTICLE A-6 RECEIPT OF AND ADDRESSES FOR NOTICES IN WRITING

6.1 *Notices in Writing* will be addressed to the recipient at the address set out below.

6.2 The delivery of a *Notice in Writing* will be by hand, by courier, by prepaid first class mail, or by other form of electronic communication during the transmission of which no indication of failure of receipt is communicated to the sender.

6.3 A *Notice in Writing* delivered by one party in accordance with this *Contract* will be deemed to have been received by the other party on the date of delivery if delivered by hand or courier, or if sent by mail it will be deemed to have been received five calendar days after the date on which it was mailed, provided that if either such day is not a *Working Day*, then the *Notice in Writing* will be deemed to have been received on the *Working Day* next following such day.

6.4 A *Notice in Writing* sent by any form of electronic communication will be deemed to have been received on the date of its transmission provided that if such day is not a *Working Day* or if it is received after the end of normal business hours on the date of its transmission at the place of receipt, then it will be deemed to have been received at the opening of business at the place of receipt on the first *Working Day* next following the transmission thereof.

6.5 An address for a party may be changed by *Notice in Writing* to the other party setting out the new address in accordance with this Article.

Note: This contract is protected by copyright. Use of a CCDC 2 document not containing a CCDC 2 copyright seal constitutes an infringement of copyright. Only sign this contract if the document cover page bears a CCDC 2 copyright seal to demonstrate that it is intended by the parties to be an accurate and unamended version of CCDC 2 – 2020 except to the extent that any alterations, additions or modifications are set forth in supplementary conditions.

Owner

VICTORIA COUNTY

*name of Owner**

495 CHEBUCTO STREET, BADDECK, NS B0E 1B0

address

KELLY.BRETT@VICTORIACOUNTY.CA

email address

Contractor

*name of Contractor**

address

email address

Consultant

STRAIT ENGINEERING LIMITED

*name of Consultant**

298 REEVES STREET, UNIT 9, PORT HAWKESBURY, NOVA SCOTIA, B9A 2B4

address

DMYETTE@STRAITENG.COM

email address

*** If it is intended that a specific individual must receive the notice, that individual's name shall be indicated.***

ARTICLE A-7 LANGUAGE OF THE CONTRACT

7.1 When the *Contract Documents* are prepared in both the English and French languages, it is agreed that in the event of any apparent discrepancy between the English and French versions, the English / French # language shall prevail.
 # Complete this statement by striking out inapplicable term.

7.2 This Agreement is drawn in English at the request of the parties hereto. La présente convention est rédigée en anglais à la demande des parties.

ARTICLE A-8 SUCCESSION

8.1 The *Contract* shall enure to the benefit of and be binding upon the parties hereto, their respective heirs, legal representatives, successors, and assigns.

Note: This contract is protected by copyright. Use of a CCDC 2 document not containing a CCDC 2 copyright seal constitutes an infringement of copyright. Only sign this contract if the document cover page bears a CCDC 2 copyright seal to demonstrate that it is intended by the parties to be an accurate and unamended version of CCDC 2 – 2020 except to the extent that any alterations, additions or modifications are set forth in supplementary conditions.

In witness whereof the parties hereto have executed this Agreement by the hands of their duly authorized representatives.

SIGNED AND DELIVERED
in the presence of:

WITNESS

OWNER

VICTORIA COUNTY

_____
name of Owner

_____
signature

_____
signature

_____
name of person signing

_____
name and title of person signing

WITNESS

CONTRACTOR

_____
name of Contractor

_____
signature

_____
signature

_____
name of person signing

_____
name and title of person signing

N.B. *Where legal jurisdiction, local practice or Owner or Contractor requirement calls for:*

(a) proof of authority to execute this document, attach such proof of authority in the form of a certified copy of a resolution naming the representative(s) authorized to sign the Agreement for and on behalf of the corporation or partnership; or

(b) the affixing of a corporate seal, this Agreement should be properly sealed.

Note: This contract is protected by copyright. Use of a CCDC 2 document not containing a CCDC 2 copyright seal constitutes an infringement of copyright. Only sign this contract if the document cover page bears a CCDC 2 copyright seal to demonstrate that it is intended by the parties to be an accurate and unamended version of CCDC 2 – 2020 except to the extent that any alterations, additions or modifications are set forth in supplementary conditions.

DEFINITIONS

The following Definitions shall apply to all *Contract Documents*.

Change Directive

A *Change Directive* is a written instruction prepared by the *Consultant* and signed by the *Owner* directing the *Contractor* to proceed with a change in the *Work* within the general scope of the *Contract Documents* prior to the *Owner* and the *Contractor* agreeing upon adjustments in the *Contract Price* and the *Contract Time*.

Change Order

A *Change Order* is a written amendment to the *Contract* prepared by the *Consultant* and signed by the *Owner* and the *Contractor* stating their agreement upon:

- a change in the *Work*;
- the method of adjustment or the amount of the adjustment in the *Contract Price*, if any; and
- the extent of the adjustment in the *Contract Time*, if any.

Construction Equipment

Construction Equipment means all machinery and equipment, either operated or not operated, that is required for preparing, fabricating, conveying, erecting, or otherwise performing the *Work* but is not incorporated into the *Work*.

Consultant

The *Consultant* is the person or entity engaged by the *Owner* and identified as such in the Agreement. The *Consultant* is the Architect, the Engineer or entity licensed to practise in the province or territory of the *Place of the Work*.

Contract

The *Contract* is the undertaking by the parties to perform their respective duties, responsibilities and obligations as prescribed in the *Contract Documents* and represents the entire agreement between the parties.

Contract Documents

The *Contract Documents* consist of those documents listed in Article A-3 of the Agreement – CONTRACT DOCUMENTS and amendments agreed upon between the parties.

Contract Price

The *Contract Price* is the amount stipulated in Article A-4 of the Agreement – CONTRACT PRICE.

Contract Time

The *Contract Time* is the time from commencement of the *Work* to the date of *Ready-for-Takeover* as stipulated in paragraph 1.3 of Article A-1 of the Agreement – THE WORK .

Contractor

The *Contractor* is the person or entity identified as such in the Agreement.

Drawings

The *Drawings* are the graphic and pictorial portions of the *Contract Documents*, wherever located and whenever issued, showing the design, location and dimensions of the *Work*, generally including plans, elevations, sections, details, and diagrams.

Notice in Writing

A *Notice in Writing*, where identified in the *Contract Documents*, is a written communication between the parties or between them and the *Consultant* that is transmitted in accordance with the provisions of Article A-6 of the Agreement – RECEIPT OF AND ADDRESSES FOR NOTICES IN WRITING.

Owner

The *Owner* is the person or entity identified as such in the Agreement.

Other Contractor

Other Contractor means a contractor, other than the *Contractor* or a *Subcontractor*, engaged by the *Owner* for the *Project*.

Payment Legislation

Payment Legislation means such legislation in effect at the *Place of the Work* which governs payment under construction contracts.

Place of the Work

The *Place of the Work* is the designated site or location of the *Work* identified in the *Contract Documents*.

Product

Product or Products means material, machinery, equipment, and fixtures forming part of the *Work*, but does not include *Construction Equipment.*

Note: This contract is protected by copyright. Use of a CCDC 2 document not containing a CCDC 2 copyright seal constitutes an infringement of copyright. Only sign this contract if the document cover page bears a CCDC 2 copyright seal to demonstrate that it is intended by the parties to be an accurate and unamended version of CCDC 2 – 2020 except to the extent that any alterations, additions or modifications are set forth in supplementary conditions.

Project

The *Project* means the total construction contemplated of which the *Work* may be the whole or a part.

Ready-for-Takeover

Ready-for-Takeover shall have been attained when the conditions set out in paragraph 12.1.1 of GC 12.1 – READY-FOR-TAKEOVER have been met, as verified by the *Consultant* pursuant to paragraph 12.1.4.2 of GC 12.1 – READY-FOR-TAKEOVER.

Shop Drawings

Shop Drawings are drawings, diagrams, illustrations, schedules, performance charts, brochures, *Product* data, and other data which the *Contractor* provides to illustrate details of portions of the *Work*.

Specifications

The *Specifications* are that portion of the *Contract Documents*, wherever located and whenever issued, consisting of the written requirements and standards for *Products*, systems, workmanship, quality, and the services necessary for the performance of the *Work*.

Subcontractor

A *Subcontractor* is a person or entity having a direct contract with the *Contractor* to perform a part or parts of the *Work* at the *Place of the Work*.

Substantial Performance of the Work

Substantial Performance of the Work is as defined in the lien legislation applicable to the *Place of the Work*.

Supplemental Instruction

A *Supplemental Instruction* is an instruction, not involving adjustment in the *Contract Price* or *Contract Time*, in the form of *Specifications*, *Drawings*, schedules, samples, models, or written instructions, consistent with the intent of the *Contract Documents*. It is to be issued by the *Consultant* to supplement the *Contract Documents* as required for the performance of the *Work*.

Supplier

A *Supplier* is a person or entity having a direct contract with the *Contractor* to supply *Products*.

Temporary Work

Temporary Work means temporary supports, structures, facilities, services, and other temporary items, excluding *Construction Equipment*, required for the execution of the *Work* but not incorporated into the *Work*.

Value Added Taxes

Value Added Taxes means such sum as shall be levied upon the *Contract Price* by the Federal or any Provincial or Territorial Government and is computed as a percentage of the *Contract Price* and includes the Goods and Services Tax, the Quebec Sales Tax, the Harmonized Sales Tax, and any similar tax, the collection and payment of which have been imposed on the *Contractor* by tax legislation.

Work

The *Work* means the total construction and related services required by the *Contract Documents*.

Working Day

Working Day means a day other than a Saturday, Sunday, statutory holiday, or statutory vacation day that is observed by the construction industry in the area of the *Place of the Work*.

Note: This contract is protected by copyright. Use of a CCDC 2 document not containing a CCDC 2 copyright seal constitutes an infringement of copyright. Only sign this contract if the document cover page bears a CCDC 2 copyright seal to demonstrate that it is intended by the parties to be an accurate and unamended version of CCDC 2 – 2020 except to the extent that any alterations, additions or modifications are set forth in supplementary conditions.

GENERAL CONDITIONS

PART 1 GENERAL PROVISIONS

GC 1.1 CONTRACT DOCUMENTS

1.1.1 The intent of the *Contract Documents* is to include the labour, *Products* and services necessary for the performance of the *Work* by the *Contractor* in accordance with these documents. It is not intended, however, that the *Contractor* shall supply products or perform work not consistent with, not covered by, or not properly inferable from the *Contract Documents*.

1.1.2 The *Contract Documents* are complementary, and what is required by one shall be as binding as if required by all. Performance by the *Contractor* shall be required only to the extent consistent with the *Contract Documents*.

1.1.3 The *Contractor* shall review the *Contract Documents* for the purpose of facilitating co-ordination and execution of the *Work* by the *Contractor*.

1.1.4 The *Contractor* is not responsible for errors, omissions or inconsistencies in the *Contract Documents.* If there are perceived errors, omissions or inconsistencies discovered by or made known to the *Contractor*, the *Contractor* shall promptly report to the *Consultant* and shall not proceed with the work affected until the *Contractor* has received corrected or additional information from the *Consultant*.

1.1.5 If there is a conflict within the *Contract Documents*:

.1 the order of priority of documents, from highest to lowest, shall be

- the Agreement between *Owner* and *Contractor*,
- the Definitions,
- Supplementary Conditions,
- the General Conditions,
- Division 01 of the *Specifications*,
- technical *Specifications*,
- material and finishing schedules,
- the *Drawings*.

.2 *Drawings* of larger scale shall govern over those of smaller scale of the same date.

.3 dimensions shown on *Drawings* shall govern over dimensions scaled from *Drawings*.

.4 amended or later dated documents shall govern over earlier documents of the same type.

.5 noted materials and annotations shall govern over graphic indications.

1.1.6 Nothing contained in the *Contract Documents* shall create any contractual relationship between:

.1 the *Owner* and a *Subcontractor*, a *Supplier*, or their agent, employee, or other person performing any portion of the *Work*.

.2 the *Consultant* and the *Contractor*, a *Subcontractor*, a *Supplier*, or their agent, employee, or other person performing any portion of the *Work*.

1.1.7 Words and abbreviations which have well known technical or trade meanings are used in the *Contract Documents* in accordance with such recognized meanings.

1.1.8 References in the *Contract Documents* to the singular shall be considered to include the plural as the context requires.

1.1.9 Neither the organization of the *Specifications* nor the arrangement of *Drawings* shall control the *Contractor* in dividing the work among *Subcontractors* and *Suppliers*.

1.1.10 *Specifications*, *Drawings*, models, and copies thereof furnished by the *Consultant* are and shall remain the *Consultant*'s property, with the exception of the signed *Contract* sets, which shall belong to each party to the *Contract*. All *Specifications*, *Drawings* and models furnished by the *Consultant* are to be used only with respect to the *Work* and are not to be used on other work. These *Specifications*, *Drawings* and models are not to be copied or altered in any manner without the written authorization of the *Consultant*.

1.1.11 Physical models furnished by the *Contractor* at the *Owner*'s expense are the property of the *Owner*.

GC 1.2 LAW OF THE CONTRACT

1.2.1 The law of the *Place of the Work* shall govern the interpretation of the *Contract*.

GC 1.3 RIGHTS AND REMEDIES

1.3.1 Except as expressly provided in the *Contract Documents*, the duties and obligations imposed by the *Contract Documents* and the rights and remedies available thereunder shall be in addition to and not a limitation of any duties, obligations, rights, and remedies otherwise imposed or available by law.

Note: This contract is protected by copyright. Use of a CCDC 2 document not containing a CCDC 2 copyright seal constitutes an infringement of copyright. Only sign this contract if the document cover page bears a CCDC 2 copyright seal to demonstrate that it is intended by the parties to be an accurate and unamended version of CCDC 2 – 2020 except to the extent that any alterations, additions or modifications are set forth in supplementary conditions.

1.3.2 No action or failure to act by the *Owner*, the *Consultant* or the *Contractor* shall constitute a waiver of any right or duty afforded any of them under the *Contract*, nor shall any such action or failure to act constitute an approval of or acquiescence in any breach thereunder, except as may be specifically agreed in writing.

GC 1.4 ASSIGNMENT

1.4.1 Neither party to the *Contract* shall assign the *Contract* or a portion thereof without the written consent of the other, which consent shall not be unreasonably withheld.

PART 2 ADMINISTRATION OF THE CONTRACT

GC 2.1 AUTHORITY OF THE CONSULTANT

2.1.1 The *Consultant* will have authority to act on behalf of the *Owner* only to the extent provided in the *Contract Documents*, unless otherwise modified by written agreement as provided in paragraph 2.1.2.

2.1.2 The duties, responsibilities and limitations of authority of the *Consultant* as set forth in the *Contract Documents* shall be modified or extended only with the written consent of the *Owner*, the *Consultant* and the *Contractor*.

GC 2.2 ROLE OF THE CONSULTANT

2.2.1 The *Consultant* will provide administration of the *Contract* as described in the *Contract Documents*.

2.2.2 The *Consultant* will visit the *Place of the Work* at intervals appropriate to the progress of construction to become familiar with the progress and quality of the work and to determine if the *Work* is proceeding in general conformity with the *Contract Documents*.

2.2.3 If the *Owner* and the *Consultant* agree, the *Consultant* will provide at the *Place of the Work*, one or more project representatives to assist in carrying out the *Consultant*'s responsibilities. The duties, responsibilities and limitations of authority of such project representatives shall be as set forth in writing to the *Contractor*.

2.2.4 Based on the *Consultant*'s observations and evaluation of the *Contractor*'s applications for payment, the *Consultant* will determine the amounts owing to the *Contractor* under the *Contract* and will issue certificates for payment as provided in Article A-5 of the Agreement – PAYMENT, GC 5.3 – PAYMENT and GC 5.5 – FINAL PAYMENT.

2.2.5 The *Consultant* will not be responsible for and will not have control, charge or supervision of construction means, methods, techniques, sequences, or procedures, or for safety precautions and programs required in connection with the *Work* in accordance with the applicable construction safety legislation, other regulations or general construction practice. The *Consultant* will not be responsible for the *Contractor*'s failure to perform the *Work* in accordance with the *Contract Documents*.

2.2.6 Except with respect to GC 5.1 – FINANCING INFORMATION REQUIRED OF THE OWNER, the *Consultant* will be, in the first instance, the interpreter of the requirements of the *Contract Documents*.

2.2.7 Matters in question relating to the performance of the *Work* or the interpretation of the *Contract Documents* shall be initially referred in writing to the *Consultant* by the party raising the question for interpretations and findings and copied to the other party.

2.2.8 Interpretations and findings of the *Consultant* shall be consistent with the intent of the *Contract Documents*. In making such interpretations and findings the *Consultant* will not show partiality to either the *Owner* or the *Contractor*.

2.2.9 The *Consultant*'s interpretations and findings will be given in writing to the parties within a reasonable time.

2.2.10 With respect to claims for a change in *Contract Price*, the *Consultant* will make findings as set out in GC 6.6 – CLAIMS FOR A CHANGE IN CONTRACT PRICE.

2.2.11 The *Consultant* will have authority to reject work which in the *Consultant*'s opinion does not conform to the requirements of the *Contract Documents*. Whenever the *Consultant* considers it necessary or advisable, the *Consultant* will have authority to require inspection or testing of work, whether or not such work is fabricated, installed or completed. However, neither the authority of the *Consultant* to act nor any decision either to exercise or not to exercise such authority shall give rise to any duty or responsibility of the *Consultant* to the *Contractor*, *Subcontractors*, *Suppliers,* or their agents, employees, or other persons performing any of the *Work*.

2.2.12 During the progress of the *Work* the *Consultant* will furnish *Supplemental Instructions* to the *Contractor* with reasonable promptness or in accordance with a schedule for such instructions agreed to by the *Consultant* and the *Contractor.*

2.2.13 The *Consultant* will review and take appropriate action upon *Shop Drawings*, samples and other submittals by the *Contractor*, in accordance with the *Contract Documents*.

Note: This contract is protected by copyright. Use of a CCDC 2 document not containing a CCDC 2 copyright seal constitutes an infringement of copyright. Only sign this contract if the document cover page bears a CCDC 2 copyright seal to demonstrate that it is intended by the parties to be an accurate and unamended version of CCDC 2 – 2020 except to the extent that any alterations, additions or modifications are set forth in supplementary conditions.

2.2.14 The *Consultant* will prepare *Change Orders* and *Change Directives* as provided in GC 6.2 – CHANGE ORDER and GC 6.3 – CHANGE DIRECTIVE.

2.2.15 The *Consultant* will conduct reviews of the *Work* to determine the date of *Substantial Performance of the Work* and verify that *Ready-for-Takeover* has been attained.

2.2.16 All certificates issued by the *Consultant* will be to the best of the *Consultant*'s knowledge, information and belief. By issuing any certificate, the *Consultant* does not guarantee the *Work* is correct or complete.

2.2.17 The *Consultant* will receive and review written warranties and related documents required by the *Contract* and provided by the *Contractor* and will forward such warranties and documents to the *Owner* for the *Owner*'s acceptance.

2..2.18 If the *Consultant*'s engagement is terminated, the *Owner* shall immediately engage a *Consultant* against whom the *Contractor* makes no reasonable objection and whose duties and responsibilities under the *Contract Documents* will be that of the former *Consultant*.

GC 2.3 REVIEW AND INSPECTION OF THE WORK

2.3.1 The *Owner* and the *Consultant* shall have access to the *Work* at all times. The *Contractor* shall provide sufficient, safe and proper facilities at all times for the review of the *Work* by the *Consultant* and the inspection of the *Work* by authorized agencies. If parts of the *Work* are in preparation at locations other than the *Place of the Work*, the *Owner* and the *Consultant* shall be given access to such work whenever it is in progress.

2.3.2 If work is designated for tests, inspections or approvals in the *Contract Documents*, by the *Consultant*'s instructions, or by the laws or ordinances of the *Place of the Work*, the *Contractor* shall give the *Consultant* reasonable notification of when the work will be ready for review and inspection. The *Contractor* shall arrange for and shall give the *Consultant* reasonable notification of the date and time of inspections by other authorities.

2.3.3 The *Contractor* shall furnish promptly to the *Consultant* two copies of certificates and inspection reports relating to the *Work*.

2.3.4 If the *Contractor* covers, or permits to be covered, work that has been designated for special tests, inspections or approvals before such special tests, inspections or approvals are made, given or completed, the *Contractor* shall, if so directed, uncover such work, have the inspections or tests satisfactorily completed, and make good covering work at the *Contractor*'s expense.

2.3.5 The *Consultant* may order any portion or portions of the *Work* to be examined to confirm that such work is in accordance with the requirements of the *Contract Documents*. If the work is not in accordance with the requirements of the *Contract Documents*, the *Contractor* shall correct the work and pay the cost of examination and correction. If the work is in accordance with the requirements of the *Contract Documents*, the *Owner* shall pay the cost of examination and restoration.

2.3.6 The *Contractor* shall pay the cost of making any test or inspection, including the cost of samples required for such test or inspection, if such test or inspection is designated in the *Contract Documents* to be performed by the *Contractor* or is required by the laws or ordinances applicable to the *Place of the Work*.

2.3.7 The *Contractor* shall pay the cost of samples required for any test or inspection to be performed by others if such test or inspection is designated in the *Contract Documents*.

GC 2.4 DEFECTIVE WORK

2.4.1 The *Contractor* shall promptly correct defective work that has been rejected by the *Consultant* as failing to conform to the *Contract Documents* whether or not the defective work was incorporated in the *Work* or the defect is the result of poor workmanship, use of defective products or damage through carelessness or other act or omission of the *Contractor*.

2.4.2 The *Contractor* shall make good promptly *Other Contractors'* work destroyed or damaged by such corrections at the *Contractor*'s expense.

2.4.3 If in the opinion of the *Consultant* it is not expedient to correct defective work or work not performed as provided in the *Contract Documents*, the *Owner* may deduct from the amount otherwise due to the *Contractor* the difference in value between the work as performed and that called for by the *Contract Documents*. If the *Owner* and the *Contractor* do not agree on the difference in value, they shall refer the matter to the *Consultant* for a finding.

PART 3 EXECUTION OF THE WORK

GC 3.1 CONTROL OF THE WORK

3.1.1 The *Contractor* shall have total control of the *Work* and shall effectively direct and supervise the *Work* so as to ensure conformity with the *Contract Documents*.

Note: This contract is protected by copyright. Use of a CCDC 2 document not containing a CCDC 2 copyright seal constitutes an infringement of copyright. Only sign this contract if the document cover page bears a CCDC 2 copyright seal to demonstrate that it is intended by the parties to be an accurate and unamended version of CCDC 2 – 2020 except to the extent that any alterations, additions or modifications are set forth in supplementary conditions.

3.1.2 The *Contractor* shall be solely responsible for construction means, methods, techniques, sequences, and procedures and for co-ordinating the various parts of the *Work* under the *Contract*.

GC 3.2 CONSTRUCTION BY THE OWNER OR OTHER CONTRACTORS

3.2.1 The *Owner* reserves the right to award separate contracts in connection with other parts of the *Project* to *Other Contractors* and to perform work with own forces.

3.2.2 When separate contracts are awarded for other parts of the *Project*, or when work is performed by the *Owner*'s own forces, the *Owner* shall:

.1 provide for the co-ordination of the activities and work of *Other Contractors* and the *Owner*'s own forces with the *Work* of the *Contract*;

.2 enter into separate contracts with *Other Contractors* under conditions of contract which are compatible with the conditions of the *Contract*;

.3 ensure that insurance coverage is provided to the same requirements as are called for in GC 11.1 – INSURANCE and co-ordinate such insurance with the insurance coverage of the *Contractor* as it affects the *Work*; and

.4 take all reasonable precautions to avoid labour disputes or other disputes on the *Project* arising from the work of *Other Contractors* or the *Owner*'s own forces.

3.2.3 When separate contracts are awarded for other parts of the *Project*, or when work is performed by the *Owner*'s own forces, the *Contractor* shall:

.1 afford the *Owner* and *Other Contractors* reasonable opportunity to store their products and execute their work;

.2 co-ordinate and schedule the *Work* with the work of *Other Contractors* or the *Owner*'s own forces that are identified in the *Contract Documents*;

.3 participate with *Other Contractors* and the *Owner* in reviewing their construction schedules when directed to do so; and

.4 report promptly to the *Consultant* in writing any apparent deficiencies in the work of *Other Contractors* or of the *Owner*'s own forces, where such work affects the proper execution of any portion of the *Work*, prior to proceeding with that portion of the *Work*.

3.2.4 Where a change in the *Work* is required as a result of the co-ordination and integration of the work of *Other Contractors* or *Owner*'s own forces with the *Work*, the changes shall be authorized and valued as provided in GC 6.1 – OWNER'S RIGHT TO MAKE CHANGES, GC 6.2 – CHANGE ORDER and GC 6.3 – CHANGE DIRECTIVE.

3.2.5 Disputes and other matters in question between the *Contractor* and *Other Contractors* shall be dealt with as provided in Part 8 of the General Conditions – DISPUTE RESOLUTION provided the *Other Contractors* have reciprocal obligations. The *Contractor* shall be deemed to have consented to arbitration of any dispute with any *Other Contractor* whose contract with the *Owner* contains a similar agreement to arbitrate. In the absence of *Other Contractors* having reciprocal obligations, disputes and other matters in question initiated by the *Contractor* against *Other Contractors* will be considered disputes and other matters in question between the *Contractor* and the *Owner*.

3.2.6 Should the *Owner*, the *Consultant*, *Other Contractors*, or anyone employed by them directly or indirectly be responsible for ill-timed work necessitating cutting or remedial work to be performed, the cost of such cutting or remedial work shall be valued as provided in GC 6.1 – OWNER'S RIGHT TO MAKE CHANGES, GC 6.2 – CHANGE ORDER and GC 6.3 – CHANGE DIRECTIVE.

GC 3.3 TEMPORARY WORK

3.3.1 The *Contractor* shall have the sole responsibility for the design, erection, operation, maintenance, and removal of *Temporary Work* unless otherwise specified in the *Contract Documents*.

3.3.2 The *Contractor* shall engage and pay for registered professional engineering personnel skilled in the appropriate disciplines to perform those functions referred to in paragraph 3.3.1 where required by law or by the *Contract Documents* and in all cases where such *Temporary Work* is of such a nature that professional engineering skill is required to produce safe and satisfactory results.

3.3.3 Notwithstanding the provisions of GC 3.1 – CONTROL OF THE WORK, paragraphs 3.3.1 and 3.3.2 or provisions to the contrary elsewhere in the *Contract Documents* where such *Contract Documents* include designs for *Temporary Work* or specify a method of construction in whole or in part, such designs or methods of construction shall be considered to be part of the design of the *Work* and the *Contractor* shall not be held responsible for that part of the design or the specified method of construction. The *Contractor* shall, however, be responsible for the execution of such design or specified method of construction in the same manner as for the execution of the *Work*.

Note: This contract is protected by copyright. Use of a CCDC 2 document not containing a CCDC 2 copyright seal constitutes an infringement of copyright. Only sign this contract if the document cover page bears a CCDC 2 copyright seal to demonstrate that it is intended by the parties to be an accurate and unamended version of CCDC 2 – 2020 except to the extent that any alterations, additions or modifications are set forth in supplementary conditions.

GC 3.4 CONSTRUCTION SCHEDULE

3.4.1 The *Contractor* shall:

.1 prepare and submit to the *Owner* and the *Consultant* prior to the first application for payment, a construction schedule that indicates the timing of the major activities of the *Work* and provides sufficient detail of the critical events and their inter-relationship to demonstrate the *Work* will be performed in conformity with the *Contract Time*;

.2 monitor the progress of the *Work* relative to the construction schedule and update the schedule on a monthly basis or as stipulated by the *Contract Documents*; and

.3 advise the *Consultant* of any revisions required to the schedule as the result of extensions of the *Contract Time* as provided in Part 6 of the General Conditions – CHANGES IN THE WORK.

GC 3.5 SUPERVISION

3.5.1 The *Contractor* shall provide all necessary supervision and appoint a competent representative who shall be in attendance at the *Place of the Work* while the *Work* is being performed. The appointed representative shall not be changed except for valid reason.

3.5.2 The appointed representative shall represent the *Contractor* at the *Place of the Work*. Information and instructions provided by the *Consultant* to the *Contractor*'s appointed representative shall be deemed to have been received by the *Contractor*, except with respect to Article A-6 of the Agreement – RECEIPT OF AND ADDRESSES FOR NOTICES IN WRITING.

GC 3.6 SUBCONTRACTORS AND SUPPLIERS

3.6.1 The *Contractor* shall preserve and protect the rights of the parties under the *Contract* with respect to work to be performed under subcontract, and shall:

.1 enter into contracts or written agreements with *Subcontractors* and *Suppliers* to require them to perform their work as provided in the *Contract Documents*;

.2 incorporate the applicable terms and conditions of the *Contract Documents* into all contracts or written agreements with *Subcontractors* and *Suppliers*; and

.3 be as fully responsible to the *Owner* for acts and omissions of *Subcontractors*, *Suppliers* and any persons directly or indirectly employed by them as for acts and omissions of persons directly employed by the *Contractor*.

3.6.2 The *Contractor* shall indicate in writing, if requested by the *Owner*, those *Subcontractors* or *Suppliers* whose bids have been received by the *Contractor* which the *Contractor* would be prepared to accept for the performance of a portion of the *Work*. Should the *Owner* not object before signing the *Contract*, the *Contractor* shall employ those *Subcontractors* or *Suppliers* so identified by the *Contractor* in writing for the performance of that portion of the *Work* to which their bid applies.

3.6.3 The *Owner* may, for reasonable cause, at any time before the *Owner* has signed the *Contract*, object to the use of a proposed *Subcontractor* or *Supplier* and require the *Contractor* to employ one of the other subcontract bidders.

3.6.4 If the *Owner* requires the *Contractor* to change a proposed *Subcontractor* or *Supplier*, the *Contract Price* and *Contract Time* shall be adjusted by the difference occasioned by such required change.

3.6.5 The *Contractor* shall not be required to employ as a *Subcontractor* or *Supplier*, a person or firm to which the *Contractor* may reasonably object.

3.6.6 The *Owner*, through the *Consultant*, may provide to a *Subcontractor* or *Supplier* information as to the percentage of the *Subcontractor*'s or *Supplier*'s work which has been certified for payment.

GC 3.7 LABOUR AND PRODUCTS

3.7.1 The *Contractor* shall maintain good order and discipline among the *Contractor*'s employees engaged on the *Work* and employ only workers that are skilled in the tasks assigned.

3.7.2 The *Contractor* shall provide and pay for labour, *Products*, tools, *Construction Equipment*, water, heat, light, power, transportation, and other facilities and services necessary for the performance of the *Work* in accordance with the *Contract*.

3.7.3 Unless otherwise specified in the *Contract Documents*, *Products* provided shall be new. *Products* which are not specified shall be of a quality consistent with those specified and their use acceptable to the *Consultant*.

GC 3.8 SHOP DRAWINGS

3.8.1 The *Contractor* shall provide *Shop Drawings* as required in the *Contract Documents*.

3.8.2 The *Contractor* shall provide *Shop Drawings* to the *Consultant* to review in accordance with an agreed schedule, or in the absence of an agreed schedule, in orderly sequence and sufficiently in advance so as to cause no delay in the *Work* or in the work of *Other Contractors* or the *Owner*'s own forces.

Note: This contract is protected by copyright. Use of a CCDC 2 document not containing a CCDC 2 copyright seal constitutes an infringement of copyright. Only sign this contract if the document cover page bears a CCDC 2 copyright seal to demonstrate that it is intended by the parties to be an accurate and unamended version of CCDC 2 – 2020 except to the extent that any alterations, additions or modifications are set forth in supplementary conditions.

3.8.3 The *Contractor* shall review all *Shop Drawings* before providing them to the *Consultant*. The *Contractor* represents by this review that:

.1 the *Contractor* has determined and verified all applicable field measurements, field construction conditions, *Product* requirements, catalogue numbers and similar data, or will do so, and

.2 the *Contractor* has checked and co-ordinated each *Shop Drawing* with the requirements of the *Work* and of the *Contract Documents*.

3.8.4 The *Consultant*'s review is for conformity to the design concept and for general arrangement only.

3.8.5 At the time of providing *Shop Drawings*, the *Contractor* shall expressly advise the *Consultant* in writing of any deviations in a *Shop Drawing* from the requirements of the *Contract Documents.* The *Consultant* shall indicate the acceptance or rejection of such deviation expressly in writing.

3.8.6 The *Consultant*'s review shall not relieve the *Contractor* of responsibility for errors or omissions in the *Shop Drawings* or for meeting all requirements of the *Contract Documents*.

3.8.7 The *Consultant* will review and return *Shop Drawings* in accordance with the schedule agreed upon, or, in the absence of such schedule, with reasonable promptness so as to cause no delay in the performance of the *Work*.

PART 4 ALLOWANCES

GC 4.1 CASH ALLOWANCES

4.1.1 The *Contract Price* includes the cash allowances, if any, stated in the *Contract Documents*. The scope of the *Work* or costs included in such cash allowances shall be as described in the *Contract Documents*.

4.1.2 The *Contract Price*, and not the cash allowances, includes the *Contractor*'s overhead and profit in connection with such cash allowances.

4.1.3 Expenditures under cash allowances shall be authorized by the *Owner* through the *Consultant*.

4.1.4 Where the actual cost of the *Work* under any cash allowance exceeds the amount of the allowance, any unexpended amounts from other cash allowances shall be reallocated, at the *Consultant's* direction, to cover the shortfall, and, in that case, there shall be no additional amount added to the *Contract Price* for overhead and profit. Only where the actual cost of the *Work* under all cash allowances exceeds the total amount of all cash allowances shall the *Contractor* be compensated for the excess incurred and substantiated, plus an amount for overhead and profit on the excess only, as set out in the *Contract Documents*.

4.1.5 The net amount of any unexpended cash allowances, after providing for any reallocations as contemplated in paragraph 4.1.4, shall be deducted from the *Contract Price* by *Change Order* without any adjustment for the *Contractor's* overhead and profit on such amount.

4.1.6 The value of the *Work* performed under a cash allowance is eligible to be included in progress payments.

4.1.7 The *Contractor* and the *Consultant* shall jointly prepare a schedule that shows when the items called for under cash allowances must be ordered to avoid delaying the progress of the *Work*.

GC 4.2 CONTINGENCY ALLOWANCE

4.2.1 The *Contract Price* includes the contingency allowance, if any, stated in the *Contract Documents*.

4.2.2 The contingency allowance includes the *Contractor*'s overhead and profit in connection with such contingency allowance.

4.2.3 Expenditures under the contingency allowance shall be authorized and valued as provided in GC 6.1 – OWNER'S RIGHT TO MAKE CHANGES, GC 6.2 – CHANGE ORDER and GC 6.3 – CHANGE DIRECTIVE.

4.2.4 The *Contract Price* shall be adjusted by *Change Order* to provide for any difference between the expenditures authorized under paragraph 4.2.3 and the contingency allowance.

PART 5 PAYMENT

GC 5.1 FINANCING INFORMATION REQUIRED OF THE OWNER

5.1.1 The *Owner* shall, at the request of the *Contractor*, before signing the *Contract*, and promptly from time to time thereafter, furnish to the *Contractor* reasonable evidence that financial arrangements have been made to fulfill the *Owner*'s obligations under the *Contract*.

5.1.2 The *Owner* shall give the *Contractor Notice in Writing* of any material change in the *Owner*'s financial arrangements to fulfil the *Owner*'s obligations under the *Contract* during the performance of the *Contract*.

Note: This contract is protected by copyright. Use of a CCDC 2 document not containing a CCDC 2 copyright seal constitutes an infringement of copyright. Only sign this contract if the document cover page bears a CCDC 2 copyright seal to demonstrate that it is intended by the parties to be an accurate and unamended version of CCDC 2 – 2020 except to the extent that any alterations, additions or modifications are set forth in supplementary conditions.

GC 5.2 APPLICATIONS FOR PAYMENT

5.2.1 Applications for payment on account as provided in Article A-5 of the Agreement – PAYMENT shall be submitted monthly to the *Owner* and the *Consultant* simultaneously as the *Work* progresses.

5.2.2 Applications for payment shall be dated the last day of each payment period, which is the last day of the month or an alternative day of the month agreed in writing by the parties.

5.2.3 The amount claimed shall be for the value, proportionate to the amount of the *Contract*, of *Work* performed and *Products* delivered to the *Place of the Work* as of the last day of the payment period.

5.2.4 The *Contractor* shall submit to the *Consultant*, at least 15 calendar days before the first application for payment, a schedule of values for the parts of the *Work*, aggregating the total amount of the *Contract Price*, so as to facilitate evaluation of applications for payment.

5.2.5 The schedule of values shall be made out in such form as specified in the *Contract* and supported by such evidence as the *Consultant* may reasonably require.

5.2.6 Applications for payment shall be based on the schedule of values accepted by the *Consultant* and shall comply with the provisions of *Payment Legislation*.

5.2.7 Each application for payment shall include evidence of compliance with workers' compensation legislation at the *Place of the Work* and after the first payment, a declaration by the *Contractor* as to the distribution made of the amounts previously received using document CCDC 9A 'Statutory Declaration'.

5.2.8 Applications for payment for *Products* delivered to the *Place of the Work* but not yet incorporated into the *Work* shall be supported by such evidence as the *Consultant* may reasonably require to establish the value and delivery of the *Products*.

GC 5.3 PAYMENT

5.3.1 After receipt by the *Consultant* and the *Owner* of an application for payment submitted by the *Contractor* in accordance with GC 5.2 – APPLICATIONS FOR PAYMENT:

.1 The *Consultant* will issue to the *Owner* and copy to the *Contractor*, no later than 10 calendar days after the receipt of the application for payment, a certificate for payment in the amount applied for, or in such other amount as the *Consultant* determines to be properly due. If the *Consultant* certifies a different amount, or rejects the application or part thereof, the *Owner* shall promptly issue a written notice to the *Contractor* giving reasons for the revision or rejection, such written notice to be in compliance with *Payment Legislation*.

.2 The *Owner* shall make payment to the *Contractor* on account as provided in Article A-5 of the Agreement – PAYMENT on or before 28 calendar days after the receipt by the *Owner* and the *Consultant* of the application for payment, and in any event, in compliance with *Payment Legislation*.

GC 5.4 SUBSTANTIAL PERFORMANCE OF THE WORK AND PAYMENT OF HOLDBACK

5.4.1 The *Consultant* will review the *Work* to certify or verify the validity of the application for *Substantial Performance of the Work* and will promptly, and in any event, no later than 20 calendar days after receipt of the *Contractor*s application:

.1 advise the *Contractor* in writing that the *Work* or the designated portion of the *Work* is not substantially performed and give reasons why, or

.2 state the date of *Substantial Performance of the Work* or a designated portion of the *Work* in a certificate and issue a copy of that certificate to each of the *Owner* and the *Contractor*.

5.4.2 Where the holdback amount required by the applicable lien legislation has not been placed in a separate lien holdback account, the *Owner* shall, no later than 10 calendar days prior to the expiry of the holdback period stipulated in the lien legislation applicable to the *Place of the Work*, place the holdback amount in a bank account in the joint names of the *Owner* and the *Contractor*.

5.4.3 Subject to the requirements of any *Payment Legislation*, all holdback amount prescribed by the applicable lien legislation for the *Work* shall become due and payable to the *Contractor* no later than 10 *Working Days* following the expiration of the holdback period stipulated in the lien legislation applicable to the *Place of the Work*.

5.4.4 The *Contractor* shall submit an application for payment of the lien holdback amount in accordance with GC 5.3 – PAYMENT.

5.4.5 Where legislation permits progressive release of the holdback for a portion of the *Work* and the *Consultant* has certified or verified that the part of the *Work* has been performed prior to *Substantial Performance of the Work*, the *Owner* hereby agrees to release, and shall release, such portion to the *Contractor* in accordance with such legislation.

Note: This contract is protected by copyright. Use of a CCDC 2 document not containing a CCDC 2 copyright seal constitutes an infringement of copyright. Only sign this contract if the document cover page bears a CCDC 2 copyright seal to demonstrate that it is intended by the parties to be an accurate and unamended version of CCDC 2 – 2020 except to the extent that any alterations, additions or modifications are set forth in supplementary conditions.

5.4.6 Notwithstanding any progressive release of the holdback, the *Contractor* shall ensure that such parts of the *Work* are protected pending the issuance of a final certificate for payment and be responsible for the correction of defects or work not performed regardless of whether or not such was apparent when the holdback was released.

GC 5.5 FINAL PAYMENT

5.5.1 When the *Contractor* considers that the *Work* is completed, the *Contractor* shall submit an application for final payment.

5.5.2 The *Consultant* will, no later than 10 calendar days after the receipt of an application from the *Contractor* for final payment, review the *Work* to verify the validity of the application and when the *Consultant* finds the *Contractor*'s application for final payment valid, the *Consultant* will promptly issue a final certificate for payment to the *Owner,* with a copy to the *Contractor*.

5.5.3 If the *Consultant* rejects the application or part thereof, the *Owner* will promptly issue a written notice to the *Contractor* giving reasons for the revision or rejection, such written notice to be in compliance with *Payment Legislation*.

5.5.4 Subject to the provision of paragraph 10.4.1 of GC 10.4 – WORKERS' COMPENSATION, and any legislation applicable to the *Place of the Work*, the *Owner* shall, no later than 5 calendar days after the issuance of a final certificate for payment, pay the *Contractor* as provided in Article A-5 of the Agreement – PAYMENT and in any event, in compliance with *Payment Legislation*.

GC 5.6 DEFERRED WORK

5.6.1 If because of climatic or other conditions reasonably beyond the control of the *Contractor*, or if the *Owner* and the *Contractor* agree that, there are items of work that must be deferred, payment in full for that portion of the *Work* which has been performed as certified by the *Consultant* shall not be withheld or delayed by the *Owner* on account thereof, but the *Owner* may withhold, until the remaining portion of the *Work* is finished, only such an amount that the *Consultant* determines is sufficient and reasonable to cover the cost of performing such deferred *Work*.

GC 5.7 NON-CONFORMING WORK

5.7.1 No payment by the *Owner* under the *Contract* nor partial or entire use or occupancy of the *Work* by the *Owner* shall constitute an acceptance of any portion of the *Work* or *Products* which are not in accordance with the requirements of the *Contract Documents*.

PART 6 CHANGES IN THE WORK

GC 6.1 OWNER'S RIGHT TO MAKE CHANGES

6.1.1 The *Owner*, through the *Consultant*, without invalidating the *Contract*, may make:
.1 changes in the *Work* consisting of additions, deletions or other revisions to the *Work* by *Change Order* or *Change Directive*, and
.2 changes to the *Contract Time* for the *Work*, or any part thereof, by *Change Order*.

6.1.2 The *Contractor* shall not perform a change in the *Work* without a *Change Order* or a *Change Directive*.

GC 6.2 CHANGE ORDER

6.2.1 When a change in the *Work* is proposed or required, the *Consultant* will provide the *Contractor* with a written description of the proposed change in the *Work*. The *Contractor* shall promptly present to the *Consultant*, in a form that can be reasonably evaluated, a method of adjustment or an amount of adjustment for the *Contract Price*, if any, and the adjustment in the *Contract Time*, if any, for the proposed change in the *Work*.

6.2.2 When the *Owner* and the *Contractor* agree to the adjustments in the *Contract Price* and *Contract Time* or to the method to be used to determine the adjustments, such agreement shall be effective immediately and shall be recorded in a *Change Order*. The value of the work performed as the result of a *Change Order* shall be included in the applications for progress payment.

GC 6.3 CHANGE DIRECTIVE

6.3.1 If the *Owner* requires the *Contractor* to proceed with a change in the *Work* prior to the *Owner* and the *Contractor* agreeing upon the corresponding adjustment in *Contract Price* and *Contract Time*, the *Owner*, through the *Consultant*, shall issue a *Change Directive*.

6.3.2 A *Change Directive* shall only be used to direct a change in the *Work* which is within the general scope of the *Contract Documents*.

6.3.3 A *Change Directive* shall not be used to direct a change in the *Contract Time* only.

Note: This contract is protected by copyright. Use of a CCDC 2 document not containing a CCDC 2 copyright seal constitutes an infringement of copyright. Only sign this contract if the document cover page bears a CCDC 2 copyright seal to demonstrate that it is intended by the parties to be an accurate and unamended version of CCDC 2 – 2020 except to the extent that any alterations, additions or modifications are set forth in supplementary conditions.

6.3.4 Upon receipt of a *Change Directive*, the *Contractor* shall proceed promptly with the change in the *Work*.

6.3.5 For the purpose of valuing *Change Directives*, changes in the *Work* that are not substitutions or otherwise related to each other shall not be grouped together in the same *Change Directive*.

6.3.6 The adjustment in the *Contract Price* for a change carried out by way of a *Change Directive* shall be determined on the basis of the cost of the *Contractor*'s actual expenditures and savings attributable to the *Change Directive*, valued in accordance with paragraph 6.3.7 and as follows:

.1 If the change results in a net increase in the *Contractor*'s cost, the *Contract Price* shall be increased by the amount of the net increase in the *Contractor*'s cost, plus the *Contractor*'s percentage fee on such net increase.

.2 If the change results in a net decrease in the *Contractor*'s cost, the *Contract Price* shall be decreased by the amount of the net decrease in the *Contractor*'s cost, without adjustment for the *Contractor*'s percentage fee.

.3 The *Contractor*'s fee shall be as specified in the *Contract Documents* or as otherwise agreed by the parties.

6.3.7 The cost of performing the work attributable to the *Change Directive* shall be limited to the actual cost of the following in as much as it contributes directly to the implementation of the *Change Directive*:

Labour

.1 rates that are listed in the schedule or as agreed by the *Owner* and the *Contractor* including wages, benefits, compensation, contributions, assessments, or taxes incurred for such items as employment insurance, provincial or territorial health insurance, workers' compensation, and Canada or Quebec Pension Plan for:

(1) trade labour in the direct employ of the *Contractor*;

(2) the *Contractor*'s personnel when stationed at the field office;

(3) the *Contractor*'s personnel engaged at shops or on the road, in expediting the production or transportation of materials or equipment; and

(4) the *Contractor*'s office personnel engaged in a technical capacity, or other personnel identified in Article A-3 of the Agreement – CONTRACT DOCUMENTS for the time spent in the performance of the *Work*;

Products, Construction Equipment and Temporary Work

.2 cost of all *Products* including cost of transportation thereof;

.3 in the absence of agreed rates, cost less salvage value of *Construction Equipment*, *Temporary Work* and tools, exclusive of hand tools under $1,000 owned by the *Contractor*;

.4 rental cost of *Construction Equipment*, *Temporary Work* and tools, exclusive of hand tools under $1,000;

.5 cost of all equipment and services required for the *Contractor*'s field office;

Subcontract

.6 subcontract amounts of Subcontractor with pricing mechanism approved by the *Owner*;

Others

.7 travel and subsistence expenses of the *Contractor*'s personnel described in paragraph 6.3.7.1;

.8 deposits lost provided that they are not caused by negligent acts or omissions of the *Contractor*;

.9 cost of quality assurance such as independent inspection and testing services;

.10 charges levied by authorities having jurisdiction at the *Place of the Work*;

.11 royalties, patent license fees, and damages for infringement of patents and cost of defending suits therefor subject always to the *Contractor*'s obligations to indemnify the *Owner* as provided in paragraph 10.3.1 of GC 10.3 – PATENT FEES;

.12 premium for all contract securities and insurance for which the *Contractor* is required, by the *Contract Documents*, to provide, maintain and pay in relation to the performance of the *Work*;

.13 losses and expenses sustained by the *Contractor* for matters which are the subject of insurance under the policies prescribed in GC 11.1 – INSURANCE when such losses and expenses are not recoverable because the amounts are in excess of collectible amounts or within the deductible amounts;

.14 taxes and duties, other than *Value Added Taxes*, income, capital, or property taxes, relating to the *Work* for which the *Contractor* is liable;

.15 charges for voice and data communications, courier services, expressage, transmittal and reproduction of documents, and petty cash items;

.16 cost for removal and disposal of waste products and debris;

.17 legal costs, incurred by the *Contractor*, in relation to the performance of the *Work* provided that they are not:

(1) relating to a dispute between the *Owner* and the *Contractor* unless such costs are part of a settlement or awarded by arbitration or court,

(2) the result of the negligent acts or omissions of the *Contractor*, or

(3) the result of a breach of this *Contract* by the *Contractor*;

.18 cost of auditing when requested by the *Owner*; and

.19 cost of *Project* specific information technology in accordance with the method determined by the parties.

Note: This contract is protected by copyright. Use of a CCDC 2 document not containing a CCDC 2 copyright seal constitutes an infringement of copyright. Only sign this contract if the document cover page bears a CCDC 2 copyright seal to demonstrate that it is intended by the parties to be an accurate and unamended version of CCDC 2 – 2020 except to the extent that any alterations, additions or modifications are set forth in supplementary conditions.

6.3.8 Notwithstanding any other provisions contained in the General Conditions of the *Contract*, it is the intention of the parties that the cost of any item under any cost element referred to in paragraph 6.3.7 shall cover and include any and all costs or liabilities attributable to the *Change Directive* other than those which are the result of or occasioned by any failure on the part of the *Contractor* to exercise reasonable care and diligence in the *Contractor*'s attention to the *Work*. Any cost due to failure on the part of the *Contractor* to exercise reasonable care and diligence in the *Contractor*'s performance of the *Work* attributable to the *Change Directive* shall be borne by the *Contractor*.

6.3.9 The *Contractor* shall keep full and detailed accounts and records necessary for the documentation of the cost of performing the *Work* attributable to the *Change Directive* and shall provide the *Consultant* with copies thereof.

6.3.10 For the purpose of valuing *Change Directives*, the *Owner* shall be afforded reasonable access to all of the *Contractor*'s pertinent documents related to the cost of performing the *Work* attributable to the *Change Directive*.

6.3.11 Pending determination of the final amount of a *Change Directive*, the undisputed value of the *Work* performed as the result of a *Change Directive* is eligible to be included in progress payments.

6.3.12 If the *Owner* and the *Contractor* do not agree on the proposed adjustment in the *Contract Time* attributable to the change in the *Work*, or the method of determining it, the adjustment shall be referred to the *Consultant* for a finding.

6.3.13 When the *Owner* and the *Contractor* reach agreement on the adjustment to the *Contract Price* and to the *Contract Time*, this agreement shall be recorded in a *Change Order*.

GC 6.4 CONCEALED OR UNKNOWN CONDITIONS

6.4.1 If the *Owner* or the *Contractor* discover conditions at the *Place of the Work* which are:

.1 subsurface or otherwise concealed physical conditions which existed before the commencement of the *Work* and differ materially from those indicated in the *Contract Documents*; or

.2 physical conditions, other than conditions due to weather, that are of a nature which differ materially from those ordinarily found to exist and generally recognized as inherent in construction activities of the character provided for in the *Contract Documents*,

then the observing party shall give *Notice in Writing* to the other party of such conditions before they are disturbed and in no event later than 5 *Working Days* after first observance of the conditions.

6.4.2 The *Consultant* will promptly investigate such conditions and make a finding. If the finding is that the conditions differ materially and this would cause an increase or decrease in the *Contractor*'s cost or time to perform the *Work*, the *Owner*, through the *Consultant*, shall issue appropriate instructions for a change in the *Work* as provided in GC 6.2 – CHANGE ORDER or GC 6.3 – CHANGE DIRECTIVE.

6.4.3 If the *Consultant* finds that the conditions at the *Place of the Work* are not materially different or that no change in the *Contract Price* or the *Contract Time* is justified, the *Consultant* will promptly inform the *Owner* and the *Contractor* in writing.

6.4.4 If such concealed or unknown conditions relate to toxic and hazardous substances and materials, artifacts and fossils, or mould, the parties will be governed by the provisions of GC 9.2 – TOXIC AND HAZARDOUS SUBSTANCES, GC 9.3 – ARTIFACTS AND FOSSILS and GC 9.5 – MOULD.

GC 6.5 DELAYS

6.5.1 If the *Contractor* is delayed in the performance of the *Work* by the *Owner*, the *Consultant*, or anyone employed or engaged by them directly or indirectly, contrary to the provisions of the *Contract Documents*, then the *Contract Time* shall be extended for such reasonable time as the *Consultant* may recommend in consultation with the *Contractor*. The *Contractor* shall be reimbursed by the *Owner* for reasonable costs incurred by the *Contractor* as the result of such delay.

6.5.2 If the *Contractor* is delayed in the performance of the *Work* by a stop work order issued by a court or other public authority and providing that such order was not issued as the result of an act or fault of the *Contractor* or any person employed or engaged by the *Contractor* directly or indirectly, resulting in the failure of the *Contractor* to attain *Ready-for-Takeover* by the date stipulated in Article A-1 of the Agreement – THE WORK, then the *Contract Time* shall be extended for such reasonable time as the *Consultant* may recommend in consultation with the *Contractor*. The *Contractor* shall be reimbursed by the *Owner* for reasonable costs incurred by the *Contractor* as the result of such delay.

6.5.3 If the *Contractor* is delayed in the performance of the *Work* by:

.1 labour disputes, strikes, lock-outs (including lock-outs decreed or recommended for its members by a recognized contractors' association, of which the *Contractor* is a member or to which the *Contractor* is otherwise bound),

.2 fire, unusual delay by common carriers or unavoidable casualties,

.3 abnormally adverse weather conditions, or

Note: This contract is protected by copyright. Use of a CCDC 2 document not containing a CCDC 2 copyright seal constitutes an infringement of copyright. Only sign this contract if the document cover page bears a CCDC 2 copyright seal to demonstrate that it is intended by the parties to be an accurate and unamended version of CCDC 2 – 2020 except to the extent that any alterations, additions or modifications are set forth in supplementary conditions.

.4 any cause beyond the *Contractor*'s control other than one resulting from a default or breach of *Contract* by the *Contractor*, then the *Contract Time* shall be extended for such reasonable time as the *Consultant* may recommend in consultation with the *Contractor*. The extension of time shall not be less than the time lost as the result of the event causing the delay, unless the *Contractor* agrees to a shorter extension. The *Contractor* shall not be entitled to payment for costs incurred by such delays unless such delays result from actions by the *Owner*, the *Consultant* or anyone employed or engaged by them directly or indirectly.

6.5.4 No extension shall be made for delay unless *Notice in Writing* of the cause of delay is given to the *Consultant* not later than 10 *Working Days* after the commencement of the delay. In the case of a continuing cause of delay only one *Notice in Writing* shall be necessary.

6.5.5 If no schedule is made under paragraph 2.2.12 of GC 2.2 – ROLE OF THE CONSULTANT, then no request for extension shall be made because of failure of the *Consultant* to furnish instructions until 10 *Working Days* after demand for such instructions has been made.

GC 6.6 CLAIMS FOR A CHANGE IN CONTRACT PRICE

6.6.1 If the *Contractor* intends to make a claim for an increase to the *Contract Price*, or if the *Owner* intends to make a claim against the *Contractor* for a credit to the *Contract Price*, the party that intends to make the claim shall give timely *Notice in Writing* of intent to claim to the other party and to the *Consultant*.

6.6.2 Upon commencement of the event or series of events giving rise to a claim, the party intending to make the claim shall:
.1 take all reasonable measures to mitigate any loss or expense which may be incurred as a result of such event or series of events, and
.2 keep such records as may be necessary to support the claim.

6.6.3 The party making the claim shall submit within a reasonable time to the *Consultant* a detailed account of the amount claimed and the grounds upon which the claim is based and the *Consultant* will make a finding upon such claim.

6.6.4 Where the event or series of events giving rise to the claim has a continuing effect, the detailed account submitted under paragraph 6.6.3 shall be considered to be an interim account and the party making the claim shall, at such intervals as the *Consultant* may reasonably require, submit further interim accounts giving the accumulated amount of the claim and any further grounds upon which it is based. The party making the claim shall submit a final account after the end of the effects resulting from the event or series of events.

6.6.5 The *Consultant's* findings, with respect to a claim made by either party, will be given by *Notice in Writing* to both parties within 30 *Working Days* after receipt of the claim by the *Consultant*, or within such other time period as may be agreed by the parties.

6.6.6 If such finding is not acceptable to either party, the claim shall be settled in accordance with Part 8 of the General Conditions – DISPUTE RESOLUTION.

PART 7 DEFAULT NOTICE

GC 7.1 OWNER'S RIGHT TO PERFORM THE WORK, TERMINATE THE CONTRACTOR'S RIGHT TO CONTINUE WITH THE WORK OR TERMINATE THE CONTRACT

7.1.1 If the *Contractor* is adjudged bankrupt, or makes a general assignment for the benefit of creditors because of the *Contractor*'s insolvency, or if a receiver is appointed because of the *Contractor*'s insolvency, the *Owner* may, without prejudice to any other right or remedy the *Owner* may have, terminate the *Contractor*'s right to continue with the *Work*, by giving the *Contractor* or receiver or trustee in bankruptcy *Notice in Writing* to that effect.

7.1.2 If the *Contractor* neglects to perform the *Work* properly or otherwise fails to comply with the requirements of the *Contract* to a substantial degree and if the *Consultant* has given a written statement to the *Owner* and *Contractor* which provides the detail of such neglect to perform the *Work* properly or such failure to comply with the requirements of the *Contract* to a substantial degree, the *Owner* may, without prejudice to any other right or remedy the *Owner* may have, give the *Contractor Notice in Writing*, containing particulars of the default including references to applicable provisions of the *Contract*, that the *Contractor* is in default of the *Contractor*'s contractual obligations and instruct the *Contractor* to correct the default in the 5 *Working Days* immediately following the receipt of such *Notice in Writing*.

7.1.3 If the default cannot be corrected in the 5 *Working Days* specified or in such other time period as may be subsequently agreed in writing by the parties, the *Contractor* shall be in compliance with the *Owner*'s instructions if the *Contractor*:
.1 commences the correction of the default within the specified time,
.2 provides the *Owner* with an acceptable schedule for such correction, and
.3 corrects the default in accordance with the *Contract* terms and with such schedule.

Note: This contract is protected by copyright. Use of a CCDC 2 document not containing a CCDC 2 copyright seal constitutes an infringement of copyright. Only sign this contract if the document cover page bears a CCDC 2 copyright seal to demonstrate that it is intended by the parties to be an accurate and unamended version of CCDC 2 – 2020 except to the extent that any alterations, additions or modifications are set forth in supplementary conditions.

7.1.4 If the *Contractor* fails to correct the default in the time specified or in such other time period as may be subsequently agreed in writing by the parties, without prejudice to any other right or remedy the *Owner* may have, the *Owner* may by giving *Notice in Writing*:

.1 correct such default and deduct the cost thereof from any payment then or thereafter due the *Contractor* for the *Work* provided the *Consultant* has certified such cost to the *Owner* and the *Contractor*, or

.2 terminate the *Contractor*'s right to continue with the *Work* in whole or in part or terminate the *Contract*.

7.1.5 If the *Owner* terminates the *Contractor*'s right to continue with the *Work* as provided in paragraphs 7.1.1 and 7.1.4, the *Owner* shall be entitled to:

.1 take possession of the *Work* and *Products* at the *Place of the Work*; subject to the rights of third parties, utilize the *Construction Equipment* at the *Place of the Work*; finish the *Work* by whatever method the *Owner* may consider expedient, but without undue delay or expense,

.2 withhold further payment to the *Contractor* until a final certificate for payment is issued,

.3 charge the *Contractor* the amount by which the full cost of finishing the *Work* as certified by the *Consultant*, including compensation to the *Consultant* for the *Consultant*'s additional services and a reasonable allowance as determined by the *Consultant* to cover the cost of corrections to work performed by the *Contractor* that may be required under GC 12.3 – WARRANTY, exceeds the unpaid balance of the *Contract Price*; however, if such cost of finishing the *Work* is less than the unpaid balance of the *Contract Price*, the *Owner* shall pay the *Contractor* the difference, and

.4 on expiry of the warranty period, charge the *Contractor* the amount by which the cost of corrections to the *Contractor*'s work under GC 12.3 – WARRANTY exceeds the allowance provided for such corrections, or if the cost of such corrections is less than the allowance, pay the *Contractor* the difference.

7.1.6 The *Contractor*'s obligation under the *Contract* as to quality, correction and warranty of the work performed by the *Contractor* up to the time of termination shall continue in force after such termination of the *Contract*.

GC 7.2 CONTRACTOR'S RIGHT TO SUSPEND THE WORK OR TERMINATE THE CONTRACT

7.2.1 If the *Owner* is adjudged bankrupt, or makes a general assignment for the benefit of creditors because of the *Owner*'s insolvency, or if a receiver is appointed because of the *Owner*'s insolvency, the *Contractor* may, without prejudice to any other right or remedy the *Contractor* may have, terminate the *Contract* by giving the *Owner* or receiver or trustee in bankruptcy *Notice in Writing* to that effect.

7.2.2 If the *Work* is suspended or otherwise delayed for a period of 20 *Working Days* or more under an order of a court or other public authority and providing that such order was not issued as the result of an act or fault of the *Contractor* or of anyone directly or indirectly employed or engaged by the *Contractor*, the *Contractor* may, without prejudice to any other right or remedy the *Contractor* may have, terminate the *Contract* by giving the *Owner Notice in Writing* to that effect.

7.2.3 The *Contractor* may give *Notice in Writing* to the *Owner*, with a copy to the *Consultant*, that the *Owner* is in default of the *Owner*'s contractual obligations if:

.1 the *Owner* fails to furnish, when so requested by the *Contractor*, reasonable evidence that financial arrangements have been made to fulfill the *Owner*'s obligations under the *Contract*,

.2 the *Consultant* fails to issue a certificate as provided in Part 5 of the General Conditions – PAYMENT,

.3 the *Owner* fails to pay the *Contractor* when due the amounts certified by the *Consultant* or awarded by adjudication, arbitration or court, or

.4 the *Owner* fails to comply with the requirements of the *Contract* to a substantial degree and the *Consultant*, except for GC 5.1 – FINANCING INFORMATION REQUIRED OF THE OWNER, gives a written statement to the *Owner* and the *Contractor* that provides detail of such failure to comply with the requirements of the *Contract* to a substantial degree.

7.2.4 The *Contractor*'s *Notice in Writing* to the *Owner* provided under paragraph 7.2.3 shall advise that if the default is not corrected within 5 *Working Days* following the receipt of the *Notice in Writing*, the *Contractor* may, without prejudice to any other right or remedy the *Contractor* may have, suspend the *Work* or terminate the *Contract*.

7.2.5 If the *Contractor* terminates the *Contract* by giving a *Notice in Writing* to the *Owner* under the conditions set out above, the *Contractor* shall be entitled to be paid for all work performed including reasonable profit, for loss sustained upon *Products* and *Construction Equipment*, and such other damages as the *Contractor* may have sustained as a result of the termination of the *Contract*.

PART 8 DISPUTE RESOLUTION

GC 8.1 AUTHORITY OF THE CONSULTANT

8.1.1 Differences between the parties to the *Contract* as to the interpretation, application or administration of the *Contract* or any failure to agree where agreement between the parties is called for, herein collectively called disputes, which are not resolved

Note: This contract is protected by copyright. Use of a CCDC 2 document not containing a CCDC 2 copyright seal constitutes an infringement of copyright. Only sign this contract if the document cover page bears a CCDC 2 copyright seal to demonstrate that it is intended by the parties to be an accurate and unamended version of CCDC 2 – 2020 except to the extent that any alterations, additions or modifications are set forth in supplementary conditions.

in the first instance by findings of the *Consultant* as provided in GC 2.2 – ROLE OF THE CONSULTANT, shall be settled in accordance with the requirements of Part 8 of the General Conditions – DISPUTE RESOLUTION.

8.1.2 If a dispute arises under the *Contract* in respect of a matter in which the *Consultant* has no authority under the *Contract* to make a finding, the procedures set out in paragraph 8.1.3 and paragraphs 8.3.3 to 8.3.8 of GC 8.3 – NEGOTIATION, MEDIATION AND ARBITRATION, and in GC 8.4 – RETENTION OF RIGHTS apply to that dispute with the necessary changes to detail as may be required.

8.1.3 If a dispute is not resolved promptly, the *Consultant* will give such instructions as in the *Consultant*'s opinion are necessary for the proper performance of the *Work* and to prevent delays pending settlement of the dispute. The parties shall act immediately according to such instructions, it being understood that by so doing neither party will jeopardize any claim the party may have. If it is subsequently determined that such instructions were in error or at variance with the *Contract Documents*, the *Owner* shall pay the *Contractor* costs incurred by the *Contractor* in carrying out such instructions which the *Contractor* was required to do beyond what the *Contract Documents* correctly understood and interpreted would have required, including costs resulting from interruption of the *Work*.

GC 8.2 ADJUDICATION

8.2.1 Nothing in this *Contract* shall be deemed to affect the rights of the parties to resolve any dispute by adjudication as may be prescribed by applicable legislation.

GC 8.3 NEGOTIATION, MEDIATION AND ARBITRATION

8.3.1 In accordance with the rules for mediation as provided in CCDC 40 'Rules for Mediation and Arbitration of Construction Industry Disputes' in effect at the time of bid closing, the parties shall appoint a Project Mediator
.1 within 20 *Working Days* after the *Contract* was awarded, or
.2 if the parties neglected to make an appointment within the 20 *Working Days*, within 10 *Working Days* after either party by *Notice in Writing* requests that the Project Mediator be appointed.

8.3.2 A party shall be conclusively deemed to have accepted a finding of the *Consultant* under GC 2.2 – ROLE OF THE CONSULTANT and to have expressly waived and released the other party from any claims in respect of the particular matter dealt with in that finding unless, within 15 *Working Days* after receipt of that finding, the party sends a *Notice in Writing* of dispute to the other party and to the *Consultant*, which contains the particulars of the matter in dispute and the relevant provisions of the *Contract Documents*. The responding party shall send a *Notice in Writing* of reply to the dispute within 10 *Working Days* after receipt of such *Notice in Writing* setting out particulars of this response and any relevant provisions of the *Contract Documents*.

8.3.3 The parties shall make all reasonable efforts to resolve their dispute by amicable negotiations and agree to provide, without prejudice, frank, candid, and timely disclosure of relevant facts, information and documents to facilitate these negotiations.

8.3.4 After a period of 10 *Working Days* following receipt of a responding party's *Notice in Writing* of reply under paragraph 8.3.2, the parties shall request the Project Mediator to assist the parties to reach agreement on any unresolved dispute. The mediated negotiations shall be conducted in accordance with the rules for mediation as provided in CCDC 40 in effect at the time of bid closing.

8.3.5 If the dispute has not been resolved at the mediation or within such further period as is agreed by the parties, the Project Mediator will terminate the mediated negotiations by giving *Notice in Writing* to the *Owner*, the *Contractor* and the *Consultant*.

8.3.6 By giving a *Notice in Writing* to the other party and the *Consultant*, not later than 10 *Working Days* after the date of termination of the mediated negotiations under paragraph 8.3.5, either party may refer the dispute to be finally resolved by arbitration under the rules of arbitration as provided in CCDC 40 in effect at the time of bid closing. The arbitration shall be conducted in the jurisdiction of the *Place of the Work*.

8.3.7 On expiration of the 10 *Working Days*, the arbitration agreement under paragraph 8.3.6 is not binding on the parties and, if a *Notice in Writing* is not given under paragraph 8.3.6 within the required time, the parties may refer the unresolved dispute to the courts or to any other form of dispute resolution, including arbitration, which they have agreed to use.

8.3.8 If neither party, by *Notice in Writing*, given within 10 *Working Days* of the date of *Notice in Writing* requesting arbitration in paragraph 8.3.6, requires that a dispute be arbitrated immediately, all disputes referred to arbitration as provided in paragraph 8.3.6 shall be:
.1 held in abeyance until:
(1) *Ready-for-Takeover*,
(2) the *Contract* has been terminated, or
(3) the *Contractor* has abandoned the *Work*,
whichever is earlier; and

Note: This contract is protected by copyright. Use of a CCDC 2 document not containing a CCDC 2 copyright seal constitutes an infringement of copyright. Only sign this contract if the document cover page bears a CCDC 2 copyright seal to demonstrate that it is intended by the parties to be an accurate and unamended version of CCDC 2 – 2020 except to the extent that any alterations, additions or modifications are set forth in supplementary conditions.

.2 consolidated into a single arbitration under the rules governing the arbitration under paragraph 8.3.6.

GC 8.4 RETENTION OF RIGHTS

8.4.1 It is agreed that no act by either party shall be construed as a renunciation or waiver of any rights or recourses, provided the party has given the *Notice in Writing* required under Part 8 of the General Conditions – DISPUTE RESOLUTION and has carried out the instructions as provided in paragraph 8.1.3 of GC 8.1 – AUTHORITY OF THE CONSULTANT.

8.4.2 Nothing in Part 8 of the General Conditions – DISPUTE RESOLUTION shall be construed in any way to limit a party from asserting any statutory right to a lien under applicable lien legislation of the jurisdiction of the *Place of the Work* and the assertion of such right by initiating judicial proceedings is not to be construed as a waiver of any right that party may have under paragraph 8.3.6 of GC 8.3 – NEGOTIATION, MEDIATION AND ARBITRATION to proceed by way of arbitration to adjudicate the merits of the claim upon which such a lien is based.

PART 9 PROTECTION OF PERSONS AND PROPERTY

GC 9.1 PROTECTION OF WORK AND PROPERTY

9.1.1 The *Contractor* shall protect the *Work*, the *Owner*'s property and property adjacent to the *Place of the Work* from damage which may arise as the result of the *Contractor*'s operations under the *Contract*, and shall be responsible for such damage, except damage which occurs as the result of:
.1 errors or omissions in the *Contract Documents*; or
.2 acts or omissions by the *Owner*, the *Consultant*, *Other Contractors*, or their agents and employees.

9.1.2 Before commencing any work, the *Contractor* shall determine the location of all underground utilities and structures indicated in the *Contract Documents* or that are reasonably apparent in an inspection of the *Place of the Work*.

9.1.3 Should the *Contractor* in the performance of the *Contract* damage the *Work*, the *Owner*'s property or property adjacent to the *Place of the Work*, the *Contractor* shall be responsible for making good such damage at the *Contractor*'s expense.

9.1.4 Should damage occur to the *Work* or the *Owner*'s property for which the *Contractor* is not responsible, as provided in paragraph 9.1.1, the *Contractor* shall make good such damage to the *Work* and, if the *Owner* so directs, to the *Owner*'s property. The *Contract Price* and *Contract Time* shall be adjusted as provided in GC 6.1 – OWNER'S RIGHT TO MAKE CHANGES, GC 6.2 – CHANGE ORDER and GC 6.3 – CHANGE DIRECTIVE.

GC 9.2 TOXIC AND HAZARDOUS SUBSTANCES

9.2.1 For the purposes of applicable legislation related to toxic and hazardous substances, the *Owner* shall be deemed to have control and management of the *Place of the Work* with respect to existing conditions.

9.2.2 Prior to the *Contractor* commencing the *Work*, the *Owner* shall,
.1 take all reasonable steps to determine whether any toxic or hazardous substances are present at the *Place of the Work*, and
.2 provide the *Consultant* and the *Contractor* with a written list of any such substances that are known to exist and their locations.

9.2.3 The *Owner* shall take all reasonable steps to ensure that no person's exposure to any toxic or hazardous substance exceeds the time weighted levels prescribed by applicable legislation at the *Place of the Work* and that no property is damaged or destroyed as a result of exposure to, or the presence of, toxic or hazardous substances which were at the *Place of the Work* prior to the *Contractor* commencing the *Work*.

9.2.4 Unless the *Contract* expressly provides otherwise, the *Owner* shall be responsible for taking all necessary steps, in accordance with applicable legislation in force at the *Place of the Work*, to dispose of, store or otherwise render harmless any toxic or hazardous substance which was present at the *Place of the Work* prior to the *Contractor* commencing the *Work*.

9.2.5 If the *Contractor*
.1 encounters toxic or hazardous substances at the *Place of the Work*, or
.2 has reasonable grounds to believe that toxic or hazardous substances are present at the *Place of the Work*,
which were not brought to the *Place of the Work* by the *Contractor* or anyone for whom the *Contractor* is responsible and which were not disclosed by the *Owner* or which were disclosed but have not been dealt with as required under paragraph 9.2.4, the *Contractor* shall
.3 take all reasonable steps, including stopping the *Work*, to ensure that no person's exposure to any toxic or hazardous substance exceeds any applicable time weighted levels prescribed by applicable legislation at the *Place of the Work*, and
.4 immediately report the circumstances to the *Consultant* and the *Owner* in writing.

Note: This contract is protected by copyright. Use of a CCDC 2 document not containing a CCDC 2 copyright seal constitutes an infringement of copyright. Only sign this contract if the document cover page bears a CCDC 2 copyright seal to demonstrate that it is intended by the parties to be an accurate and unamended version of CCDC 2 – 2020 except to the extent that any alterations, additions or modifications are set forth in supplementary conditions.

9.2.6 If the *Owner* and the *Contractor* do not agree on the existence, significance of, or whether the toxic or hazardous substances were brought onto the *Place of the Work* by the *Contractor* or anyone for whom the *Contractor* is responsible, the *Owner* shall retain and pay for an independent qualified expert to investigate and determine such matters. The expert's report shall be delivered to the *Owner* and the *Contractor*.

9.2.7 If the *Owner* and the *Contractor* agree or if the expert referred to in paragraph 9.2.6 determines that the toxic or hazardous substances were not brought onto the place of the *Work* by the *Contractor* or anyone for whom the *Contractor* is responsible, the *Owner* shall promptly at the *Owner's* own expense:

.1 take all steps as required under paragraph 9.2.4;
.2 reimburse the *Contractor* for the costs of all steps taken pursuant to paragraph 9.2.5;
.3 extend the *Contract Time* for such reasonable time as the *Consultant* may recommend in consultation with the *Contractor* and the expert referred to in 9.2.6 and reimburse the *Contractor* for reasonable costs incurred as a result of the delay; and
.4 indemnify the *Contractor* as required by GC 13.1 – INDEMNIFICATION.

9.2.8 If the *Owner* and the *Contractor* agree or if the expert referred to in paragraph 9.2.6 determines that the toxic or hazardous substances were brought onto the place of the *Work* by the *Contractor* or anyone for whom the *Contractor* is responsible, the *Contractor* shall promptly at the *Contractor's* own expense:

.1 take all necessary steps, in accordance with applicable legislation in force at the *Place of the Work*, to safely remove and dispose the toxic or hazardous substances;
.2 make good any damage to the *Work*, the *Owner*'s property or property adjacent to the place of the *Work* as provided in paragraph 9.1.3 of GC 9.1 – PROTECTION OF WORK AND PROPERTY;
.3 reimburse the *Owner* for reasonable costs incurred under paragraph 9.2.6; and
.4 indemnify the *Owner* as required by GC 13.1 – INDEMNIFICATION.

9.2.9 If either party does not accept the expert's findings under paragraph 9.2.6, the disagreement shall be settled in accordance with Part 8 of the General Conditions – DISPUTE RESOLUTION. If such disagreement is not resolved promptly, the parties shall act immediately in accordance with the expert's determination and take the steps required by paragraph 9.2.7 or 9.2.8 it being understood that by so doing, neither party will jeopardize any claim that party may have to be reimbursed as provided by GC 9.2 – TOXIC AND HAZARDOUS SUBSTANCES.

GC 9.3 ARTIFACTS AND FOSSILS

9.3.1 Fossils, coins, articles of value or antiquity, structures and other remains or things of scientific or historic interest discovered at the *Place or Work* shall, as between the *Owner* and the *Contractor*, be deemed to be the absolute property of the *Owner*.

9.3.2 The *Contractor* shall take all reasonable precautions to prevent removal or damage to discoveries as identified in paragraph 9.3.1, and shall advise the *Consultant* upon discovery of such items.

9.3.3 The *Consultant* will investigate the impact on the *Work* of the discoveries identified in paragraph 9.3.1. If conditions are found that would cause an increase or decrease in the *Contractor's* cost or time to perform the *Work*, the *Owner*, through the *Consultant*, shall issue appropriate instructions for a change in the *Work* as provided in GC 6.2 – CHANGE ORDER or GC 6.3 – CHANGE DIRECTIVE.

GC 9.4 CONSTRUCTION SAFETY

9.4.1 The *Contractor* shall be responsible for establishing, initiating, maintaining, and supervising all health and safety precautions and programs in connection with the performance of the *Work* in accordance with the applicable health and safety legislation.

9.4.2 The *Owner* and the *Contractor* shall comply with all health and safety precautions and programs established at the *Place of the Work*.

9.4.3 The *Owner* and the *Contractor* shall comply with the rules, regulations and practices required by the applicable health and safety legislation.

9.4.4 The *Owner* shall cause the *Consultant*, *Other Contractors* and the *Owner*'s own forces to comply with all health and safety precautions and programs established by the *Contractor* at the *Place of the Work*.

9.4.5 Nothing in this *Contract* shall affect the determination of liability under the applicable health and safety legislation.

GC 9.5 MOULD

9.5.1 If the *Contractor* or the *Owner* observes or reasonably suspects the presence of mould at the *Place of the Work*, the remediation of which is not expressly part of the *Work*,

.1 the observing party shall promptly report the circumstances to the other party in writing,
.2 the *Contractor* shall promptly take all reasonable steps, including stopping the *Work* if necessary, to ensure that no person suffers injury, sickness or death and that no property is damaged as a result of exposure to or the presence of the mould, and

Note: This contract is protected by copyright. Use of a CCDC 2 document not containing a CCDC 2 copyright seal constitutes an infringement of copyright. Only sign this contract if the document cover page bears a CCDC 2 copyright seal to demonstrate that it is intended by the parties to be an accurate and unamended version of CCDC 2 – 2020 except to the extent that any alterations, additions or modifications are set forth in supplementary conditions.

.3 if the *Owner* and the *Contractor* do not agree on the existence, significance or cause of the mould or as to what steps need be taken to deal with it, the *Owner* shall retain and pay for an independent qualified expert to investigate and determine such matters. The expert's report shall be delivered to the *Owner* and the *Contractor*.

9.5.2 If the *Owner* and the *Contractor* agree, or if the expert referred to in paragraph 9.5.1.3 determines that the presence of mould was caused by the *Contractor*'s operations under the *Contract*, the *Contractor* shall promptly, at the *Contractor*'s own expense:
.1 take all reasonable and necessary steps to safely remediate or dispose of the mould,
.2 make good any damage to the *Work*, the *Owner*'s property or property adjacent to the *Place of the Work* as provided in paragraph 9.1.3 of GC 9.1 – PROTECTION OF WORK AND PROPERTY,
.3 reimburse the *Owner* for reasonable costs incurred under paragraph 9.5.1.3, and
.4 indemnify the *Owner* as required by GC 13.1 – INDEMNIFICATION.

9.5.3 If the *Owner* and the *Contractor* agree, or if the expert referred to in paragraph 9.5.1.3 determines that the presence of mould was not caused by the *Contractor*'s operations under the *Contract*, the *Owner* shall promptly, at the *Owner*'s own expense:
.1 take all reasonable and necessary steps to safely remediate or dispose of the mould,
.2 reimburse the *Contractor* for the cost of taking the steps under paragraph 9.5.1.2 and making good any damage to the *Work* as provided in paragraph 9.1.4 of GC 9.1 – PROTECTION OF WORK AND PROPERTY,
.3 extend the *Contract Time* for such reasonable time as the *Consultant* may recommend in consultation with the *Contractor* and the expert referred to in paragraph 9.5.1.3 and reimburse the *Contractor* for reasonable costs incurred as a result of the delay, and
.4 indemnify the *Contractor* as required by GC 13.1 – INDEMNIFICATION.

9.5.4 If either party does not accept the expert's finding under paragraph 9.5.1.3, the disagreement shall be settled in accordance with Part 8 of the General Conditions – DISPUTE RESOLUTION. If such disagreement is not resolved promptly, the parties shall act immediately in accordance with the expert's determination and take the steps required by paragraphs 9.5.2 or 9.5.3, it being understood that by so doing neither party will jeopardize any claim the party may have to be reimbursed as provided by GC 9.5 – MOULD.

PART 10 GOVERNING REGULATIONS

GC 10.1 TAXES AND DUTIES

10.1.1 The *Contract Price* shall include all taxes and customs duties in effect at the time of the bid closing except for *Value Added Taxes* payable by the *Owner* to the *Contractor* as stipulated in Article A-4 of the Agreement – CONTRACT PRICE.

10.1.2 Any increase or decrease in costs to the *Contractor* due to changes in taxes and duties after the time of the bid closing shall increase or decrease the *Contract Price* accordingly.

GC 10.2 LAWS, NOTICES, PERMITS, AND FEES

10.2.1 The laws of the *Place of the Work* shall govern the *Work*.

10.2.2 The *Owner* shall obtain and pay for development approvals, building permit, permanent easements, rights of servitude, and all other necessary approvals and permits, except for the permits and fees referred to in paragraph 10.2.3 or for which the *Contract Documents* specify as the responsibility of the *Contractor*.

10.2.3 The *Contractor* shall be responsible for the procurement of permits, licences, inspections, and certificates, which are necessary for the performance of the *Work* and customarily obtained by contractors in the jurisdiction of the *Place of the Work* after the issuance of the building permit. The *Contract Price* includes the cost of these permits, licences, inspections, and certificates, and their procurement.

10.2.4 The *Contractor* shall give the required notices and comply with the laws, ordinances, rules, regulations, or codes which are or become in force during the performance of the *Work* and which relate to the *Work*, to the preservation of the public health, and to construction safety.

10.2.5 The *Contractor* shall not be responsible for verifying that the *Contract Documents* are in compliance with the applicable laws, ordinances, rules, regulations, or codes relating to the *Work*. If the *Contract Documents* are at variance therewith, or if, subsequent to the time of bid closing, changes are made to the applicable laws, ordinances, rules, regulations, or codes which require modification to the *Contract Documents*, the *Contractor* shall advise the *Consultant* in writing requesting direction immediately upon such variance or change becoming known. The *Consultant* will issue the changes required to the *Contract Documents* as provided in GC 6.1 – OWNER'S RIGHT TO MAKE CHANGES, GC 6.2 – CHANGE ORDER and GC 6.3 – CHANGE DIRECTIVE.

Note: This contract is protected by copyright. Use of a CCDC 2 document not containing a CCDC 2 copyright seal constitutes an infringement of copyright. Only sign this contract if the document cover page bears a CCDC 2 copyright seal to demonstrate that it is intended by the parties to be an accurate and unamended version of CCDC 2 – 2020 except to the extent that any alterations, additions or modifications are set forth in supplementary conditions.

10.2.6 If the *Contractor* fails to advise the *Consultant* in writing; fails to obtain direction as required in paragraph 10.2.5; and performs work knowing it to be contrary to any laws, ordinances, rules, regulations, or codes; the *Contractor* shall be responsible for and shall correct the violations thereof; and shall bear the costs, expenses and damages attributable to the failure to comply with the provisions of such laws, ordinances, rules, regulations, or codes.

10.2.7 If, subsequent to the time of bid closing, changes are made to applicable laws, ordinances, rules, regulations, or codes of authorities having jurisdiction which affect the cost of the *Work*, either party may submit a claim in accordance with the requirements of GC 6.6 – CLAIMS FOR A CHANGE IN CONTRACT PRICE.

GC 10.3 PATENT FEES

10.3.1 The *Contractor* shall pay the royalties and patent licence fees required for the performance of the *Contract*. The *Contractor* shall hold the *Owner* harmless from and against claims, demands, losses, costs, damages, actions, suits, or proceedings arising out of the *Contractor*'s performance of the *Contract* which are attributable to an infringement or an alleged infringement of a patent of invention by the *Contractor* or anyone for whose acts the *Contractor* may be liable.

10.3.2 The *Owner* shall hold the *Contractor* harmless against claims, demands, losses, costs, damages, actions, suits, or proceedings arising out of the *Contractor*'s performance of the *Contract* which are attributable to an infringement or an alleged infringement of a patent of invention in executing anything for the purpose of the *Contract*, the physical model, plan or design of which was supplied to the *Contractor* as part of the *Contract*.

GC 10.4 WORKERS' COMPENSATION

10.4.1 Prior to commencing the *Work*, and again with the *Contractor*'s applications for payment, the *Contractor* shall provide evidence of compliance with workers' compensation legislation at the *Place of the Work*.

PART 11 INSURANCE

GC 11.1 INSURANCE

11.1.1 Without restricting the generality of GC 13.1 – INDEMNIFICATION, the *Contractor* shall provide, maintain and pay for the following insurance coverages, the requirements of which are specified in CCDC 41 'CCDC Insurance Requirements' in effect at the time of bid closing except as hereinafter provided:

.1 General liability insurance in the name of the *Contractor* and include, or in the case of a single, blanket policy, be endorsed to name, the *Owner* and the *Consultant* as insureds but only with respect to liability, other than legal liability arising out of their sole negligence, arising out of the operations of the *Contractor* with regard to the *Work*. General liability insurance shall be maintained from the date of commencement of the *Work* until one year from the date of *Ready-for-Takeover*. Liability coverage shall be provided for completed operations hazards from the date of *Ready-for-Takeover* on an ongoing basis for a period of 6 years following *Ready-for-Takeover*.

.2 Automobile Liability Insurance from the date of commencement of the *Work* until one year after the date of *Ready-for-Takeover*.

.3 Unmanned aerial vehicle aircraft, manned aircraft or watercraft Liability Insurance when owned or non-owned manned or unmanned aircraft or watercraft are used directly or indirectly in the performance of the *Work*.

.4 "Broad form" property insurance in the joint names of the *Contractor*, the *Owner* and the *Consultant*. The policy shall include as insureds all *Subcontractors*. The "Broad form" property insurance shall be provided from the date of commencement of the *Work* until the earliest of:

(1) 10 calendar days after the date of *Ready-for-Takeover*;

(2) on the commencement of use or occupancy of any part or section of the *Work* unless such use or occupancy is for construction purposes, habitational, office, banking, convenience store under 465 square metres in area, or parking purposes, or for the installation, testing and commissioning of equipment forming part of the *Work*; and

(3) when left unattended for more than 30 consecutive calendar days or when construction activity has ceased for more than 30 consecutive calendar days.

.5 Boiler and machinery insurance in the joint names of the *Contractor*, the *Owner* and the *Consultant*. The policy shall include as insureds all *Subcontractors*. The coverage shall be maintained continuously from commencement of use or operation of the boiler and machinery objects insured by the policy and until 10 calendar days after the date of *Ready-for-Takeover*.

.6 The "Broad form" property and boiler and machinery policies shall provide that, in the case of a loss or damage, payment shall be made to the *Owner* and the *Contractor* as their respective interests may appear. In the event of loss or damage:

(1) the *Contractor* shall act on behalf of the *Owner* for the purpose of adjusting the amount of such loss or damage payment with the insurers. When the extent of the loss or damage is determined, the *Contractor* shall proceed to restore the *Work*. Loss or damage shall not affect the rights and obligations of either party under the *Contract* except

Note: This contract is protected by copyright. Use of a CCDC 2 document not containing a CCDC 2 copyright seal constitutes an infringement of copyright. Only sign this contract if the document cover page bears a CCDC 2 copyright seal to demonstrate that it is intended by the parties to be an accurate and unamended version of CCDC 2 – 2020 except to the extent that any alterations, additions or modifications are set forth in supplementary conditions.

that the *Contractor* shall be entitled to such reasonable extension of *Contract Time* relative to the extent of the loss or damage as the *Consultant* may recommend in consultation with the *Contractor*;

(2) the *Contractor* shall be entitled to receive from the *Owner*, in addition to the amount due under the *Contract*, the amount which the *Owner*'s interest in restoration of the *Work* has been appraised, such amount to be paid as the restoration of the *Work* proceeds in accordance with the progress payment provisions. In addition the *Contractor* shall be entitled to receive from the payments made by the insurer the amount of the *Contractor*'s interest in the restoration of the *Work*; and

(3) to the *Work* arising from the work of the *Owner*, the *Owner*'s own forces or *Other Contractors*, the *Owner* shall, in accordance with the *Owner*'s obligations under the provisions relating to construction by the *Owner* or *Other Contractors*, pay the *Contractor* the cost of restoring the *Work* as the restoration of the *Work* proceeds and as in accordance with the progress payment provisions.

.7 Contractors' Equipment Insurance from the date of commencement of the *Work* until one year after the date of *Ready-for-Takeover*.

.8 Contractors' Pollution Liability Insurance from the date of commencement of the *Work* until one year after the date of *Ready-for-Takeover*.

11.1.2 Prior to commencement of the *Work* and upon the placement, renewal, amendment, or extension of all or any part of the insurance, the *Contractor* shall promptly provide the *Owner* with confirmation of coverage and, if required, a certified true copy of the policies certified by an authorized representative of the insurer together with copies of any amending endorsements applicable to the *Work*.

11.1.3 The parties shall pay their share of the deductible amounts in direct proportion to their responsibility in regards to any loss for which the above policies are required to pay, except where such amounts may be excluded by the terms of the *Contract*.

11.1.4 If the *Contractor* fails to provide or maintain insurance as required by the *Contract Documents*, then the *Owner* shall have the right to provide and maintain such insurance and give evidence to the *Contractor* and the *Consultant*. The *Contractor* shall pay the cost thereof to the *Owner* on demand or the *Owner* may deduct the cost from the amount which is due or may become due to the *Contractor*.

11.1.5 All required insurance policies shall be with insurers licensed to underwrite insurance in the jurisdiction of the *Place of the Work*.

11.1.6 If a revised version of CCDC 41 is published, which specifies reduced insurance requirements, the parties shall address such reduction, prior to the *Contractor*'s insurance policy becoming due for renewal, and record any agreement in a *Change Order*.

11.1.7 If a revised version of CCDC 41 is published, which specifies increased insurance requirements, the *Owner* may request the increased coverage from the *Contractor* by way of a *Change Order*.

11.1.8 A *Change Directive* shall not be used to direct a change in the insurance requirements in response to the revision of CCDC 41.

PART 12 OWNER TAKEOVER

GC 12.1 READY-FOR-TAKEOVER

12.1.1 The prerequisites to attaining *Ready-for-Takeover* of the *Work* are limited to the following:

.1 The *Consultant* has certified or verified the *Substantial Performance of the Work*.

.2 Evidence of compliance with the requirements for occupancy or occupancy permit as prescribed by the authorities having jurisdiction.

.3 Final cleaning and waste removal at the time of applying for *Ready-for-Takeover*, as required by the *Contract Documents*.

.4 The delivery to the *Owner* of such operations and maintenance documents reasonably necessary for immediate operation and maintenance, as required by the *Contract Documents*.

.5 Make available a copy of the as-built drawings completed to date on site.

.6 Startup, testing required for immediate occupancy, as required by the *Contract Documents*.

.7 Ability to secure access to the *Work* has been provided to the *Owner*, if required by the *Contract Documents*.

.8 Demonstration and training, as required by the *Contract Documents*, is scheduled by the *Contractor* acting reasonably.

12.1.2 If any prerequisites set forth in paragraphs 12.1.1.3 to 12.1.1.6 must be deferred because of conditions reasonably beyond the control of the *Contractor*, or by agreement between the *Owner* and the *Contractor* to do so, *Ready-for-Takeover* shall not be delayed.

12.1.3 When the *Contractor* considers that the *Work* is *Ready-for-Takeover*, the *Contractor* shall deliver to the *Consultant* and to the *Owner* a comprehensive list of items to be completed or corrected, together with a written application for *Ready-for-Takeover* for review. Failure to include an item on the list does not alter the responsibility of the *Contractor* to complete the *Contract*.

12.1.4 The *Consultant* will review the *Work* to verify the validity of the application and will promptly, and in any event, no later than 10 calendar days after receipt of the *Contractor*'s list and application:

Note: This contract is protected by copyright. Use of a CCDC 2 document not containing a CCDC 2 copyright seal constitutes an infringement of copyright. Only sign this contract if the document cover page bears a CCDC 2 copyright seal to demonstrate that it is intended by the parties to be an accurate and unamended version of CCDC 2 – 2020 except to the extent that any alterations, additions or modifications are set forth in supplementary conditions.

.1 advise the *Contractor* in writing that the *Work* is not *Ready-for-Takeover* and give reasons why, or
.2 confirm the date of *Ready-for-Takeover* in writing to each of the *Owner* and the *Contractor*.

12.1.5 Immediately following the confirmation of the date of *Ready-for-Takeover*, the *Contractor*, in consultation with the *Consultant*, shall establish a reasonable date for finishing the *Work*.

12.1.6 The provision of GC 12.1 – READY-FOR-TAKEOVER shall be subject to GC 12.2 – EARLY OCCUPANCY BY THE OWNER.

GC 12.2 EARLY OCCUPANCY BY THE OWNER

12.2.1 The *Owner* may take occupancy of a part or the entirety of the *Work* before *Ready-for-Takeover* has been attained only as agreed by the *Contractor* which agreement shall not be unreasonably withheld.

12.2.2 The *Owner* shall not occupy a part or the entirety of the *Work* without prior approval by authorities having jurisdiction.

12.2.3 If the *Owner* takes occupancy of a part of the *Work* before *Ready-for-Takeover* has been attained:
.1 The part of the *Work* which is occupied shall be deemed to have been taken over by the *Owner* as from the date on which it is occupied.
.2 The *Contractor* shall cease to be liable for the care of such part as from this date, when responsibility shall pass to the *Owner*.
.3 The warranty period specified in paragraph 12.3.1 of GC 12.3 – WARRANTY for that part of the *Work* shall start from the date on which it is occupied.

12.2.4 If the *Owner* takes occupancy of the entirety of the *Work* before all the prerequisites are met as described in paragraph 12.1.1 of GC 12.1 – READY-FOR-TAKEOVER, the *Work* shall, subject to the requirements of the applicable lien legislation, be deemed to achieve *Ready-for-Takeover*. This shall not relieve the *Contractor*'s responsibility to complete the *Work* in a timely manner.

GC 12.3 WARRANTY

12.3.1 Except for extended warranties as described in paragraph 12.3.6, the warranty period under the *Contract* is one year from the date when *Ready-for-Takeover* has been attained.

12.3.2 The *Contractor* shall be responsible for the proper performance of the *Work* to the extent that the design and *Contract Documents* permit such performance.

12.3.3 The *Owner*, through the *Consultant*, shall promptly give the *Contractor Notice in Writing* of observed defects and deficiencies which occur during the one year warranty period.

12.3.4 Subject to paragraph 12.3.2, the *Contractor* shall correct promptly, at the *Contractor*'s expense, defects or deficiencies in the *Work* which appear prior to and during the one year warranty period.

12.3.5 The *Contractor* shall correct or pay for damage resulting from corrections made under the requirements of paragraph 12.3.4.

12.3.6 Any extended warranties required beyond the one year warranty period as described in paragraph 12.3.1, shall be as specified in the *Contract Documents*. Extended warranties shall be issued by the warrantor to the benefit of the *Owner*. The *Contractor*'s responsibility with respect to extended warranties shall be limited to obtaining any such extended warranties from the warrantor. The obligations under such extended warranties are solely the responsibilities of the warrantor.

PART 13 INDEMNIFICATION AND WAIVER

GC 13.1 INDEMNIFICATION

13.1.1 Without restricting the parties' obligation to indemnify respecting toxic and hazardous substances, patent fees and defect in title claims all as described in paragraphs 13.1.4 and 13.1.5, the *Owner* and the *Contractor* shall each indemnify and hold harmless the other from and against all claims, demands, losses, costs, damages, actions, suits, or proceedings whether in respect to losses suffered by them or in respect to claims by third parties that arise out of, or are attributable in any respect to their involvement as parties to this *Contract*, provided such claims are:
.1 caused by:
(1) the negligent acts or omissions of the party from whom indemnification is sought or anyone for whose negligent acts or omissions that party is liable, or
(2) a failure of the party to the *Contract* from whom indemnification is sought to fulfill its terms or conditions; and
.2 made by *Notice in Writing* within a period of 6 years from the *Ready-for-Takeover* date or within such shorter period as may be prescribed by any limitation statute of the Province or Territory of the *Place of the Work*.

The parties expressly waive the right to indemnity for claims other than those provided for in this *Contract*.

Note: This contract is protected by copyright. Use of a CCDC 2 document not containing a CCDC 2 copyright seal constitutes an infringement of copyright. Only sign this contract if the document cover page bears a CCDC 2 copyright seal to demonstrate that it is intended by the parties to be an accurate and unamended version of CCDC 2 – 2020 except to the extent that any alterations, additions or modifications are set forth in supplementary conditions.

13.1.2 The obligation of either party to indemnify as set forth in paragraph 13.1.1 shall be limited as follows:

.1 In respect to losses suffered by the *Owner* and the *Contractor* for which insurance is to be provided by either party pursuant to GC 11.1 – INSURANCE, the minimum liability insurance limit for one occurrence, of the applicable insurance policy, as referred to in CCDC 41 in effect at the time of bid closing.

.2 In respect to losses suffered by the *Owner* and the *Contractor* for which insurance is not required to be provided by either party in accordance with GC 11.1 – INSURANCE, the greater of the *Contract Price* as recorded in Article A-4 – CONTRACT PRICE or $2,000,000, but in no event shall the sum be greater than $20,000,000.

.3 In respect to indemnification by a party against the other with respect to losses suffered by them, such obligation shall be restricted to direct loss and damage, and neither party shall have any liability to the other for indirect, consequential, punitive or exemplary damages.

.4 In respect to indemnification respecting claims by third parties, the obligation to indemnify is without limit.

13.1.3 The obligation of either party to indemnify the other as set forth in paragraphs 13.1.1 and 13.1.2 shall be inclusive of interest and all legal costs.

13.1.4 The *Owner* and the *Contractor* shall indemnify and hold harmless the other from and against all claims, demands, losses, costs, damages, actions, suits, or proceedings arising out of their obligations described in GC 9.2 – TOXIC AND HAZARDOUS SUBSTANCES.

13.1.5 The *Owner* shall indemnify and hold harmless the *Contractor* from and against all claims, demands, losses, costs, damages, actions, suits, or proceedings:

.1 as described in paragraph 10.3.2 of GC 10.3 – PATENT FEES, and

.2 arising out of the *Contractor*'s performance of the *Contract* which are attributable to a lack of or defect in title or an alleged lack of or defect in title to the *Place of the Work*.

13.1.6 In respect to any claim for indemnity or to be held harmless by the *Owner* or the *Contractor*:

.1 *Notice in Writing* of such claim shall be given within a reasonable time after the facts upon which such claim is based become known; and

.2 should any party be required as a result of its obligation to indemnify another to pay or satisfy a final order, judgment or award made against the party entitled by this contract to be indemnified, then the indemnifying party upon assuming all liability for any costs that might result shall have the right to appeal in the name of the party against whom such final order or judgment has been made until such rights of appeal have been exhausted.

GC 13.2 WAIVER OF CLAIMS

13.2.1 Subject to any lien legislation applicable to the *Place of the Work*, the *Contractor* waives and releases the *Owner* from all claims which the *Contractor* has or reasonably ought to have knowledge of that could be advanced by the *Contractor* against the *Owner* under the *Contract*, including, without limitation, those arising from negligence or breach of contract in respect to which the cause of action is based upon acts or omissions which occurred prior to or on the *Ready-for-Takeover* date, except as follows:

.1 claims arising prior to or on the *Ready-for-Takeover* date for which *Notice in Writing* of claim has been received by the *Owner* from the *Contractor* no later than 5 calendar days before the expiry of the lien period provided by the lien legislation applicable at the *Place of the Work* or 20 calendar days following the *Ready-for-Takeover* date, whichever is later;

.2 indemnification for claims advanced against the *Contractor* by third parties for which a right of indemnification may be asserted by the *Contractor* against the *Owner* pursuant to the provisions of this *Contract*;

.3 claims respecting toxic and hazardous substances, patent fees and defect in title matters for which a right of indemnity could be asserted by the *Contractor* pursuant to the provisions of paragraphs 13.1.4 or 13.1.5 of GC 13.1 – INDEMNIFICATION; and

.4 claims resulting from acts or omissions which occur after the *Ready-for-Takeover* date.

13.2.2 The *Contractor* waives and releases the *Owner* from all claims resulting from acts or omissions which occurred after the *Ready-for-Takeover* date except for:

.1 indemnification respecting third party claims, and claims respecting toxic and hazardous substances, patent fees and defect in title matters, all as referred in paragraphs 13.2.1.2 and 13.2.1.3; and

.2 claims for which *Notice in Writing* of claim has been received by the *Owner* from the *Contractor* within 395 calendar days following the *Ready-for-Takeover* date.

13.2.3 Subject to any lien legislation applicable to the *Place of the Work*, the *Owner* waives and releases the *Contractor* from all claims which the *Owner* has or reasonably ought to have knowledge of that could be advanced by the *Owner* against the *Contractor* under the *Contract*, including, without limitation, those arising from negligence or breach of contract in respect to which the cause of action is based upon acts or omissions which occurred prior to or on the *Ready-for-Takeover* date, except as follows:

.1 claims arising prior to or on the *Ready-for-Takeover* date for which *Notice in Writing* of claim has been received by the *Contractor* from the *Owner* no later than 20 calendar days following the *Ready-for-Takeover* date;

Note: This contract is protected by copyright. Use of a CCDC 2 document not containing a CCDC 2 copyright seal constitutes an infringement of copyright. Only sign this contract if the document cover page bears a CCDC 2 copyright seal to demonstrate that it is intended by the parties to be an accurate and unamended version of CCDC 2 – 2020 except to the extent that any alterations, additions or modifications are set forth in supplementary conditions.

.2 indemnification for claims advanced against the *Owner* by third parties for which a right of indemnification may be asserted by the *Owner* against the *Contractor* pursuant to the provisions of this *Contract*;
.3 claims respecting toxic and hazardous substances for which a right of indemnity could be asserted by the *Owner* against the *Contractor* pursuant to the provisions of paragraph 13.1.4 of GC 13.1 – INDEMNIFICATION;
.4 damages arising from the *Contractor*'s actions which result in substantial defects or deficiencies in the *Work*. "Substantial defects or deficiencies" mean those defects or deficiencies in the *Work* which affect the *Work* to such an extent or in such a manner that a significant part or the whole of the *Work* is unfit for the purpose intended by the *Contract Documents*;
.5 claims arising pursuant to GC 12.3 – WARRANTY; and
.6 claims arising from acts or omissions which occur after the *Ready-for-Takeover* date.

13.2.4 Respecting claims arising upon substantial defects and deficiencies in the *Work*, as referenced in paragraph 13.2.3.4, and notwithstanding paragraph 13.2.3.5, the *Owner* waives and releases the *Contractor* from all claims except claims for which *Notice in Writing* of claim has been received by the *Contractor* from the *Owner* within a period of six years from the *Ready-for-Takeover* date, provided that any limitation statute of the Province or Territory of the *Place of the Work* permit such agreement. If the applicable limitation statute does not permit such agreement, the time within which any such claim may be brought shall be such shorter period as may be prescribed by any limitation statute of the Province or Territory of the *Place of the Work*.

13.2.5 The *Owner* waives and releases the *Contractor* from all claims arising from acts or omissions which occur after the *Ready-for-Takeover* date, except for:
.1 indemnification for claims advanced against the *Owner* by third parties, as referenced in paragraph 13.2.3.2;
.2 claims respecting toxic and hazardous substances for which a right of indemnity could be asserted by the *Owner* against the *Contractor*, as referenced in paragraph 13.2.3.3;
.3 claims arising under GC 12.3 – WARRANTY; and
.4 claims for which *Notice is Writing* has been received by the *Contractor* from the *Owner* within 395 calendar days following the *Ready-for-Takeover* date.

13.2.6 "*Notice in Writing* of claim" as provided for in GC 13.2 – WAIVER OF CLAIMS to preserve a claim or right of action which would otherwise, by the provisions of GC 13.2 – WAIVER OF CLAIMS, be deemed to be waived, must include the following:
.1 a clear and unequivocal statement of an intention to claim;
.2 a statement as to the nature of the claim and the grounds upon which the claim is based; and
.3 a statement of the estimated quantum of the claim.

13.2.7 A claim for lien asserted under the lien legislation prevailing at the *Place of the Work* shall qualify as notice of claim for the purposes of this *Contract*.

13.2.8 The party giving the *Notice in Writing* of claim as provided for in GC 13.2 – WAIVER OF CLAIMS shall submit within a reasonable time a detailed account of the amount claimed.

13.2.9 Where the event or series of events giving rise to a claim made under paragraphs 13.2.1 or 13.2.3 has a continuing effect, the detailed account submitted under paragraph 13.2.8 shall be considered to be an interim account and the party making the claim shall submit further interim accounts, at reasonable intervals, giving the accumulated amount of the claim and any further grounds upon which such claim is based. The party making the claim shall submit a final account after the end of the effects resulting from the event or series of events.

13.2.10 Nothing in GC 13.2 – WAIVER OF CLAIMS shall be deemed to affect the rights of the parties under any lien legislation or limitations legislation prevailing at the *Place of the Work*.

Note: This contract is protected by copyright. Use of a CCDC 2 document not containing a CCDC 2 copyright seal constitutes an infringement of copyright. Only sign this contract if the document cover page bears a CCDC 2 copyright seal to demonstrate that it is intended by the parties to be an accurate and unamended version of CCDC 2 – 2020 except to the extent that any alterations, additions or modifications are set forth in supplementary conditions.

1.1 DESCRIPTION OF WORK

.1 The work under this project shall generally comprise but not necessarily be limited to provision of all labour, materials and equipment for this demolition project. Work included under this project consists of demolition of the existing Dingwall Water tank and removal from the site. Included in the project scope of work is infilling of the valve chamber, cutting off the tank steel anchor bolts and site clean up/restoration.

1.2 CODES

.1 Perform work in accordance with Provincial Occupation Health and Safety Act or local application provided that in any case of conflict or discrepancy, the more stringent requirements shall apply.

.2 Meet or exceed requirements of:
- .1 contract documents,
- .2 specified standards, codes and referenced documents.

1.3 DOCUMENTS REQUIRED

.1 Maintain at job site, one copy each of following:
- .1 Contract drawings.
- .2 Specifications.
- .3 Addenda.
- .4 Reviewed shop drawings.
- .5 Change orders.
- .6 Other modifications to Contract.
- .7 Field test reports.
- .8 Copy of approved work schedule.
- .9 Manufacturers' installation and application instructions.

1.4 WORK SCHEDULE

.1 Provide within 5 working days after Contract award, schedule showing anticipated progress stages and final completion of work within time period required by Contract documents.

.2 Interim reviews of work progress based on work schedule will be conducted as decided by Consultant and schedule updated by Contractor in conjunction with and to approval of Consultant.

1.5 PROJECT MEETINGS

.1 Consultant will arrange project meetings and assume responsibility for setting times and recording and distributing minutes.

1.6 SETTING OUT OF WORK

.1 N/A

1.7 EXISTING SERVICES

.1 Before commencing work, establish location and extent of service lines in area of Work and notify Consultant of findings.

.2 Where unknown services are encountered, immediately advise Consultant and confirm findings in writing.

1.8 ADDITIONAL DRAWINGS

.1 Consultant may furnish additional drawings for clarification. These drawings shall have same meaning and intent as if they were included with plans referred to in Contract documents.

1.9 CONTRACTORS WORK PLAN

.1 Provide within 15 working days after contract award, a work plan detailing contractors strategy for carrying out the work to minimize interruptions in traffic flow, pedestrian movement, access to properties, etc.

.2 Plan to detail phasing work, maintaining access to properties, use of temporary access, single lane maintenance, etc.

END

PART 1 - GENERAL

1.1 WORK COVERED BY CONTRACT DOCUMENTS

.1 Work of this Contract comprises of the demolition of a steel water storage tank in Dingwall and removal from site. Included in the project scope of work is infilling of the valve chamber, cutting off the tank steel anchor bolts and site cleanup/restoration.

1.2 CONTRACT METHOD

.1 Construct Work under Stipulated price contract.

1.3 WORK SEQUENCE

.1 Construct Work to accommodate Owner's continued use of premises during construction and to ensure continued functionality of all municipal infrastructure.

.2 Maintain fire access/control and access for emergency vehicles.

1.4 CONTRACTOR USE OF PREMISES

.1 Unrestricted use of site until Substantial Performance.

.2 Limit use of premises for Work, and for access, to allow:
.1 Residents access to properties.
.2 Owners access to and continued use of municipal infrastructure.

.3 Co-ordinate use of premises under direction of Consultant and Owner.

.4 Obtain and pay for use of additional storage or work areas needed for operations under this Contract.

.5 Remove or alter existing work to prevent injury or damage to portions of existing work which remain.

.6 Repair or replace portions of existing work which have been altered during construction operations to match existing or adjoining work, as directed by Consultant.

.7 At completion of operations condition of existing work: equal to or better than that which existed before new work started.

1.5 EXISTING SERVICES

.1 Establish location and extent of service lines in area of work before starting Work. Notify Consultant of findings.

.2 Where unknown services are encountered, immediately advise Consultant and confirm findings in writing.

.3 Construct barriers in accordance with Section 01 56 00 - Temporary Barriers and Enclosures.

1.6 DOCUMENTS REQUIRED

.1 Maintain at job site, one copy each document as follows:

.1 Contract Drawings.
.2 Specifications.
.3 Addenda.
.4 Reviewed Shop Drawings.
.5 List of Outstanding Shop Drawings.
.6 Change Orders.
.7 Other Modifications to Contract.
.8 Field Test Reports.
.9 Copy of Approved Work Schedule.
.10 Health and Safety Plan and Other Safety Related Documents.
.11 Other documents as specified.

PART 2 - PRODUCTS

2.1 NOT USED

.1 Not used.

PART 3 - EXECUTION

3.1 NOT USED

.1 Not used.

END

PART 1 - GENERAL

1.1 RELATED REQUIREMENTS

.1 Section 02 41 16.09 – Structure Demolition Short Form

1.2 ADMINISTRATIVE

.1 Submit to Consultant submittals listed for review. Submit promptly and in orderly sequence to not cause delay in Work. Failure to submit in ample time is not considered sufficient reason for extension of Contract Time and no claim for extension by reason of such default will be allowed.

.2 Do not proceed with Work affected by submittal until review is complete.

.3 Present shop drawings, product data, samples and mock-ups in Metric units.

.4 Where items or information is not produced in Metric units converted values are acceptable.

.5 Review submittals prior to submission to Consultant. This review represents that necessary requirements have been determined and verified, or will be, and that each submittal has been checked and co-ordinated with requirements of Work and Contract Documents. Submittals not stamped, signed, dated and identified as to specific project will be returned without being examined and considered rejected.

.6 Notify Consultant, in writing at time of submission, identifying deviations from requirements of Contract Documents stating reasons for deviations.

.7 Verify field measurements and affected adjacent Work are co-ordinated.

.8 Contractor's responsibility for errors and omissions in submission is not relieved by Consultant's review of submittals.

1.2 ADMINISTRATIVE (Cont'd)

.9 Contractor's responsibility for deviations in submission from requirements of Contract Documents is not relieved by Consultant review.

.10 Keep one reviewed copy of each submission on site.

1.3 SHOP DRAWINGS AND PRODUCT DATA

.1 The term "shop drawings" means drawings, diagrams, illustrations, schedules, performance charts, brochures and other data which are to be provided by Contractor to illustrate details of a portion of Work.

.2 Indicate materials, methods of construction and attachment or anchorage, erection diagrams, connections, explanatory notes and other information necessary for completion of Work. Where articles or equipment attach or connect to other articles or equipment, indicate that such items have been co-ordinated, regardless of Section under which adjacent items will be supplied and installed. Indicate cross references to design drawings and specifications.

.3 Allow 5 days for review of each submission.

.4 Adjustments made on shop drawings by Consultant are not intended to change Contract Price. If adjustments affect value of Work, state such in writing to Consultant prior to proceeding with Work.

.5 Make changes in shop drawings as Consultant may require, consistent with Contract Documents. When resubmitting, notify Consultant in writing of revisions other than those requested.

.6 Accompany submissions with transmittal letter, containing:
.1 Date.
.2 Project title and number.
.3 Contractor's name and address.
.4 Identification and quantity of each shop drawing, product data and sample.
.5 Other pertinent data.

.7 Submissions include:
.1 Date and revision dates.
.2 Project title and number.

1.3 SHOP DRAWINGS AND PRODUCT DATA (Cont'd)

.7 Submissions include:(Cont'd)
.3 Name and address of:
.1 Subcontractor.
.2 Supplier.
.3 Manufacturer.
.4 Contractor's stamp, signed by Contractor's authorized representative certifying approval of submissions, verification of field measurements and compliance with Contract Documents.
.5 Details of appropriate portions of Work as applicable:
.1 Fabrication.
.2 Layout, showing dimensions, including identified field dimensions, and clearances.
.3 Setting or erection details.
.4 Capacities.
.5 Performance characteristics.
.6 Standards.
.7 Operating weight.
.8 Wiring diagrams.
.9 Single line and schematic diagrams.
.10 Relationship to adjacent work.

.8 After Consultant's review, distribute copies.

.9 Submit electronic copy of shop drawings for each requirement requested in specification Sections and as Consultant may reasonably request.

.10 Submit electronic copies of product data sheets or brochures for requirements requested in specification Sections and as requested by Consultant where shop drawings will not be prepared due to standardized manufacture of product.

.11 Submit electronic copies of test reports for requirements requested in specification Sections and as requested by Consultant.
.1 Report signed by authorized official of testing laboratory that material, product or system identical to material, product or system to be provided has been tested in accord with specified requirements.
.2 Testing must have been within 3 years of date of contract award for project.

1.3 SHOP DRAWINGS AND PRODUCT DATA (Cont'd)

.12 Submit electronic copies of certificates for requirements requested in specification Sections and as requested by Consultant.
.1 Statements printed on manufacturer's letterhead and signed by responsible officials of manufacturer of product, system or material attesting that product, system or material meets specification requirements.
.2 Certificates must be dated after award of project contract complete with project name.

.13 Submit electronic copies of manufacturers instructions for requirements requested in specification Sections and as requested by Consultant.
.1 Pre-printed material describing installation of product, system or material, including special notices and Material Safety Data Sheets concerning impedances, hazards and safety precautions.

.14 Submit electronic copies of Manufacturer's Field Reports for requirements requested in specification Sections and as requested by Consultant.

.15 Documentation of the testing and verification actions taken by manufacturer's representative to confirm compliance with manufacturer's standards or instructions.

.16 Submit electronic copies of Operation and Maintenance Data for requirements requested in specification Sections and as requested by Consultant.

.17 Delete information not applicable to project.

.18 Supplement standard information to provide details applicable to project.

.19 If upon review by Consultant, no errors or omissions are discovered or if only minor corrections are made, copies will be returned and fabrication and installation of Work may proceed. If shop drawings are rejected, noted copy will be returned and resubmission of corrected shop drawings, through same procedure indicated above, must be performed before fabrication and installation of Work may proceed.

1.4 CERTIFICATES AND TRANSCRIPTS

.1 Immediately after award of Contract, submit Workers' Compensation Board status.

.2 Submit transcription of insurance immediately after award of Contract.

PART 2 - PRODUCTS

2.1 NOT USED

.1 Not Used.

PART 3 - EXECUTION

3.1 NOT USED

.1 Not Used.

END

PART 1 - GENERAL

1.1 REFERENCES

.1 Canada Labour Code, Part 2, Canada Occupational Safety and Health Regulations

.2 Health Canada/Workplace Hazardous Materials Information System (WHMIS)
.1 Material Safety Data Sheets (MSDS).

.3 Province of Nova Scotia
.1 Occupational Health and Safety Act, S.N.S. 1996.

1.2 ACTION AND INFORMATIONAL SUBMITTALS

.1 Make submittals in accordance with Section 01 33 00 - Submittal Procedures.

.2 Submit site-specific Health and Safety Plan: Within 7 days after date of Notice to Proceed and prior to commencement of Work. Health and Safety Plan must include:
.1 Results of site specific safety hazard assessment.
.2 Results of safety and health risk or hazard analysis for site tasks and operation found in work plan. **Plan must take into consideration presence of lead as per Attachment A – Lead Paint Assessment Report.**

.3 Submit Contractor's Company Safety Program/ Policy for Consultant review within 7 days after date of Notice to Proceed and prior to commencement of work.

.4 Submit 1 copy of Contractor's authorized representative's work site health and safety inspection reports to Consultant weekly.

.5 Submit copies of reports or directions issued by Federal, Provincial and Territorial health and safety inspectors.

.6 Submit copies of incident and accident reports.

.7 Submit WHMIS MSDS - Material Safety Data Sheets.

.8 Consultant will review Contractor's site-specific Health and Safety Plan and provide comments to Contractor within 4 days after

receipt of plan. Revise plan as appropriate and resubmit plan to Consultant within 4 days after

1.2 ACTION AND INFORMATIONAL SUBMITTALS (Cont'd)

.8 (Cont'd) receipt of comments from Consultant.

.9 Consultant's review of Contractor's final Health and Safety plan should not be construed as approval and does not reduce the Contractor's overall responsibility for construction Health and Safety.

1.3 SAFETY ASSESSMENT

.1 Perform site specific safety hazard assessment related to project.

1.4 GENERAL REQUIREMENTS

.1 Develop written site-specific Health and Safety Plan based on hazard assessment prior to beginning site Work and continue to implement, maintain, and enforce plan until final demobilization from site. Health and Safety Plan must address project specifications.

.2 Consultant may respond in writing, where deficiencies or concerns are noted and may request re-submission with correction of deficiencies or concerns.

1.5 RESPONSIBILITY

.1 Be responsible for health and safety of persons on site, safety of property on site and for protection of persons adjacent to site and environment to extent that they may be affected by conduct of Work.

.2 Comply with and enforce compliance by employees with safety requirements of Contract Documents, applicable provincial and local statutes, regulations, and ordinances, and with site-specific Health and Safety Plan.

1.6 COMPLIANCE REQUIREMENTS

.1 Comply with Occupational Health and Safety Act, Occupational Safety General Regulations, N.S. Reg..

.2 Comply with Canada Labour Code, Canada Occupational Safety and Health Regulations.

1.7 UNFORSEEN HAZARDS

.1 When unforeseen or peculiar safety-related factor, hazard, or condition occur during performance of Work, follow procedures in place for Employee's Right to Refuse Work in accordance with Acts and Regulations of Province having jurisdiction and advise Consultant verbally and in writing.

1.8 CORRECTION OF NON-COMPLIANCE

.1 Immediately address health and safety non-compliance issues identified by authority having jurisdiction or by Consultant.

.2 Provide Consultant with written report of action taken to correct non-compliance of health and safety issues identified.

.3 Consultant may stop Work if non-compliance of health and safety regulations is not corrected.

1.9 BLASTING

.1 Blasting or other use of explosives is not permitted without prior receipt of written instruction by Consultant.

1.10 WORK STOPPAGE

.1 Give precedence to safety and health of public and site personnel and protection of environment over cost and schedule considerations for Work.

PART 2 - PRODUCTS

2.1 NOT USED

.1 Not used.

PART 3 - EXECUTION

3.1 NOT USED

.1 Not used

END

PART 1 - GENERAL

1.1 ACTION AND INFORMATIONAL

.1 Provide submittals in accordance with Section 01 33 00 - Submittal Procedures.

.2 Prior to commencing construction activities or delivery of materials to site, provide Environmental Protection Plan for review and approval by Consultant.

.3 Ensure Environmental Protection Plan includes comprehensive overview of known or potential environmental issues to be addressed during construction.

.4 Address topics at level of detail commensurate with environmental issue and required construction tasks.

.5 Include in Environmental Protection Plan:
.1 Names of persons responsible for ensuring adherence to Environmental Protection Plan.
.2 Erosion and sediment control plan identifying type and location of erosion and sediment controls to be provided.
.3 Traffic Control Plans including measures to reduce erosion of temporary roadbeds by construction traffic, especially during wet weather. Ensure plans include measures to minimize amount of mud transported onto paved public roads by vehicles or runoff.
.4 Work area plan showing proposed activity in each portion of area and identifying areas of limited use or non-use. Ensure plan includes measures for marking limits of use areas and methods for protection of features to be preserved within authorized work areas.
.5 Spill Control Plan including procedures, instructions, and reports to be used in event of unforeseen spill of regulated substance.
.6 Air pollution control plan detailing provisions to assure that dust, debris, materials, and trash, are contained on project site.
.7 Contaminant Prevention Plan identifying potentially hazardous substances to be used on job site; intended actions to prevent introduction of such materials into air, water, or ground; and detailing provisions for compliance with Federal, Provincial, and

1.1 ACTION AND INFORMATIONAL (Cont'd)

.5 (Cont'd)

.7 (Cont'd)

Municipal laws and regulations for storage and handling of these materials.

.8 Waste Water Management Plan identifying methods and procedures for management and/or discharge of waste waters which are directly derived from construction activities, such as concrete curing water, clean-up water, dewatering of ground water, disinfection water, hydrostatic test water, and water used in flushing of lines.

1.2 FIRES

.1 Fires and burning of rubbish on site not permitted.

1.3 DRAINAGE

.1 Provide Erosion and Sediment Control Plan identifying type and location of erosion and sediment controls provided.

.2 Provide temporary drainage and pumping required to keep excavations and site free from water.

.3 Ensure pumped water into waterways, sewer or drainage systems is free of suspended materials.

.4 Control disposal or runoff of water containing suspended materials or other harmful substances in accordance with local authority requirements.

1.4 SITE CLEARING AND PLANT PROTECTION

.1 Protect trees and plants on site and adjacent properties.

.2 Wrap in burlap, trees and shrubs adjacent to construction work, storage areas and trucking lanes, and encase with protective wood framework from grade level to height of 2 m minimum.

.3 Protect roots of trees to dripline during excavation and site grading to prevent disturbance or damage. Avoid unnecessary traffic, dumping and storage of materials over root zones.

1.4 SITE CLEARING AND PLANT PROTECTION (Cont'd)

.4 Minimize stripping of topsoil and vegetation.

1.5 POLLUTION CONTROL

.1 Maintain temporary erosion and pollution control features installed under this Contract.

.2 Control emissions from equipment and plant to local authorities' emission requirements.

.3 Cover or wet down dry materials and rubbish to prevent blowing dust and debris. Provide dust control for temporary roads.

1.6 NOTIFICATION

.1 Consultant will notify Contractor in writing of observed noncompliance with Federal, Provincial or Municipal environmental laws or regulations, permits, and other elements of Contractor's Environmental Protection plan.

.2 Contractor: after receipt of such notice, inform Consultant of proposed corrective action and take such action for approval by Consultant.
.1 Do not take action until after receipt of written approval by Consultant.

.3 Consultant will issue stop order of work until satisfactory corrective action has been taken.

.4 No time extensions granted or equitable adjustments allowed to Contractor for such suspensions.

PART 2 - PRODUCTS

2.1 NOT USED .1 Not Used.

PART 3 - EXECUTION

3.1 CLEANING .1 Clean in as required throughout duration of project.

.2 Ensure public waterways, storm and sanitary sewers remain free of waste and volatile materials disposal.

END

PART 1 - GENERAL

1.1 RELATED .1 Section 01 35 29.06 Health and Safety Requirements
Section 01 35 43 Environmental Procedures

1.2 INSTALLATION AND REMOVAL .1 Provide temporary controls in order to execute Work expeditiously.

.2 Remove from site all such work after use.

1.3 BARRICADES .1 Provide barricades as required to protect fresh concrete from damage.

1.4 ACCESS TO SITE .1 Provide and maintain access roads, sidewalk crossings, ramps and construction runways as may be required for access to Work.

1.5 PUBLIC TRAFFIC FLOW .1 Provide and maintain competent signal flag operators, traffic signals, barricades and flares, lights, or lanterns as required to perform Work and protect public.

1.6 FIRE ROUTES .1 Maintain access to property including overhead clearances for use by emergency response vehicles.

1.7 PROTECTION FOR OFF-SITE AND PUBLIC PROPERTY .1 Protect surrounding private and public property from damage during performance of Work.

.2 Be responsible for damage incurred. If damages occurred Contractor responsible to re-instate to existing conditions as per Consultant/Owner recommendations.

PART 2 - PRODUCTS

2.1 NOT USED .1 Not Used.

PART 3 - EXECUTION

3.1 NOT USED .1 Not Used.

END

PART 1 - GENERAL

1.1 ADMINISTRATIVE REQUIREMENTS

.1 Acceptance of Work Procedures:

.1 Contractor's Inspection: Contractor: conduct inspection of Work, identify deficiencies and defects, and repair as required to conform to Contract Documents.

.1 Notify Consultant in writing of satisfactory completion of Contractor's inspection and submit verification that corrections have been made.

.2 Request Consultant's inspection.

.2 Consultant's Inspection:

.1 Consultant and Contractor to inspect Work and identify defects and deficiencies.

.2 Contractor to correct Work as directed.

.3 Completion Tasks: submit written certificates in English that tasks have been performed as follows:

.1 Work: completed and inspected for compliance with Contract Documents.

.2 Defects: corrected and deficiencies completed.

.3 Operation of systems: demonstrated to Owner's personnel.

.4 Work: complete and ready for final inspection.

.4 Final Inspection:

.1 When completion tasks are done, request final inspection of Work by Consultant, and Contractor.

.2 When Work incomplete according to Owner and Consultant, complete outstanding items and request re-inspection.

.5 Declaration of Substantial Performance: when Consultant considers deficiencies and defects corrected and requirements of Contract substantially performed, make application for Certificate of Substantial Performance.

.6 Commencement of Lien and Warranty Periods: date of Owner's acceptance of submitted declaration of Substantial Performance to be date for commencement for warranty period and commencement of lien period unless required otherwise by lien statute of Place of Work. Contractor to submit declaration document of Substantial Performance date for Consultant to review.

1.1 ADMINISTRATIVE REQUIREMENTS (Cont'd)

.1 (Cont'd)

.7 Final Payment:

.1 When Consultant considers final deficiencies and defects corrected and requirements of Contract met, make application for final payment.

.8 Payment of Holdback: after issuance of Certificate of Substantial Performance of Work, submit application for payment of holdback amount in accordance with contractual agreement.

1.2 FINAL CLEANING .1 Clean site as required prior to de-mobilization.

.1 Remove surplus materials, excess materials, rubbish, tools and equipment.

PART 2 - PRODUCTS

2.1 NOT USED .1 Not Used.

PART 3 - EXECUTION

3.1 NOT USED .1 Not Used.

END

1 GENERAL

1.01 SUMMARY

.1 This Section includes the following:
  .1 Demolition and removal of a steel water storage tank.
  .2 Removal of protruding steel bolts.
  .3 Infilling of drain pipe.

.2 Contractor representative is required to develop details and submit a demolition plan prepared by a professional engineer.

1.02 RELATED REQUIREMENTS

.1 Section 01 35 29.06 Health and Safety Requirements.

.2 Section 01 35 43 Environmental Procedures

.3 Section 01 56 00 Temporary Barriers and Enclosures

1.03 REFERENCE STANDARDS

.1 CSA Group (CSA)
  .1 CSA S350-[M1980(R2003)], Code of Practice for Safety in Demolition of Structures.

.2 National Research Council Canada (NRC)
  .1 National Building Code of Canada [2015] (NBC).
  .2 National Fire Code of Canada [2015] (NFC).

1.04 DEFINITIONS

.1 Demolition: rapid destruction of building following removal of Hazardous Substances.

.2 Hazardous Substances: dangerous substances, dangerous goods, hazardous commodities and hazardous products, may include but not limited to: asbestos PCB's, CFC's, HCFC's poisons, corrosive agents, flammable substances, ammunition, explosives, radioactive substances, lead, or other material that can endanger human health or wellbeing or environment if handled improperly as defined by the Federal Hazardous Products Act (RSC 1985) including latest amendments.

1.05 ACTION AND INFORMATIONAL SUBMITTALS

.1 Informational Submittals: Provide the following submittals when requested by the Consultant:
  .1 Qualification Data: Submit information for companies and personnel indicating their capabilities and experience to perform work of this Section including; but not limited to, lists of completed projects with project names and addresses, names and addresses of Representative, for work of similar complexity and extent.

1.06 DELIVERY, STORAGE AND HANDLING

.1 Waste Management and Disposal: Separate waste materials for reuse and/or recycling in accordance with Owner’s requirements.

1.07 QUALITY ASSURANCE

.1 Regulatory Requirements: Perform work of this Section in accordance with the following:
- .1 Nova Scotia Workers' Compensation Board.
- .2 Nova Scotia Occupational Health and Safety Standards and Programs.
- .3 Comply with hauling and disposal regulations of authority having jurisdiction.

1.08 EXISTING CONDITIONS

.1 Review designated substance report and take precautions to protect the environment and health and safety of employees and general public. See attached Lead Paint Assessment Report, Attachment ‘A’.

.2 Should material resembling spray or trowel-applied asbestos or other designated substance be encountered, stop work, take preventative measures, and notify Consultant immediately.
- .1 Do not proceed until written instructions have been received from Consultant.

2 PRODUCTS

2.01 EQUIPMENT

.1 Leave equipment and machinery running only while in use, except where extreme temperatures prohibit shutting down.

.2 Demonstrate that tools and machinery are being used in manner which allows for salvage of materials in best condition possible.

2.02 TEMPORARY SUPPORT STRUCTURES

.1 Design temporary support structures required for demolition work and underpinning and other foundation supports necessary for the project using a qualified professional engineer registered or licensed in Province of the Work.

2.03 SOIL MATERIALS

.1 None

3 EXECUTION

3.01 EXAMINATION

.1 Survey existing conditions and correlate with requirements indicated to determine extent of structure demolition required.

3.02 PREPARATION

.1 Do Work in accordance with Section 01 35 29.06 - Health and Safety Requirements, Section 01 35 43 Environmental Procedures and Section 01 56 00 Temporary Barriers and Enclosures.

.2 Protection:
- .1 Prevent movement, settlement, or damage to adjacent structures, utilities, to remain in place. Provide bracing and shoring required.
- .2 Keep noise, dust, and inconvenience to nearby residents to a minimum.
- .3 Provide temporary dust screens, covers, railings, supports and other protection as required.

.3 Locate and protect utility lines. Do not disrupt active or energized utilities.

3.03 DEMOLITION SALVAGE AND DISPOSAL

.1 Remove all of existing structure from site. Sort materials into appropriate piles for reuse and/or recycling.

.2 Cut off steel anchor bolts flush with concrete foundation and remove from site.

.3 Dispose of removed materials, to appropriate recycling facilities except where specified otherwise, in accordance with authority having jurisdiction.

3.04 PARTIAL DEMOLITION OF STRUCTURES

.1 None

3.05 STOCKPILING

.1 N/A.

3.06 REMOVAL FROM SITE

.1 Transport material from site in accordance with applicable regulations.

3.07 SITE RESTORATION

.1 Grade any disturbed areas around demolished structure to pre-demolition condition.

.2 Ensure no construction debris remains on site.

3.08 REPAIRS

.1 General: Promptly repair damage to adjacent construction caused by structure demolition operations.

.2 Where repairs to existing surfaces are required, patch to produce surfaces suitable for new materials.

.3 Restore exposed finishes of patched areas and extend restoration into

adjoining construction in a manner that eliminates evidence of patching and refinishing.

3.09 CLEANING AND RESTORATION

.1 Keep site clean and organized throughout demolition procedure.

.2 Upon completion of project, reinstate areas affected by Work to condition which existed prior to beginning of Work.

END OF SECTION

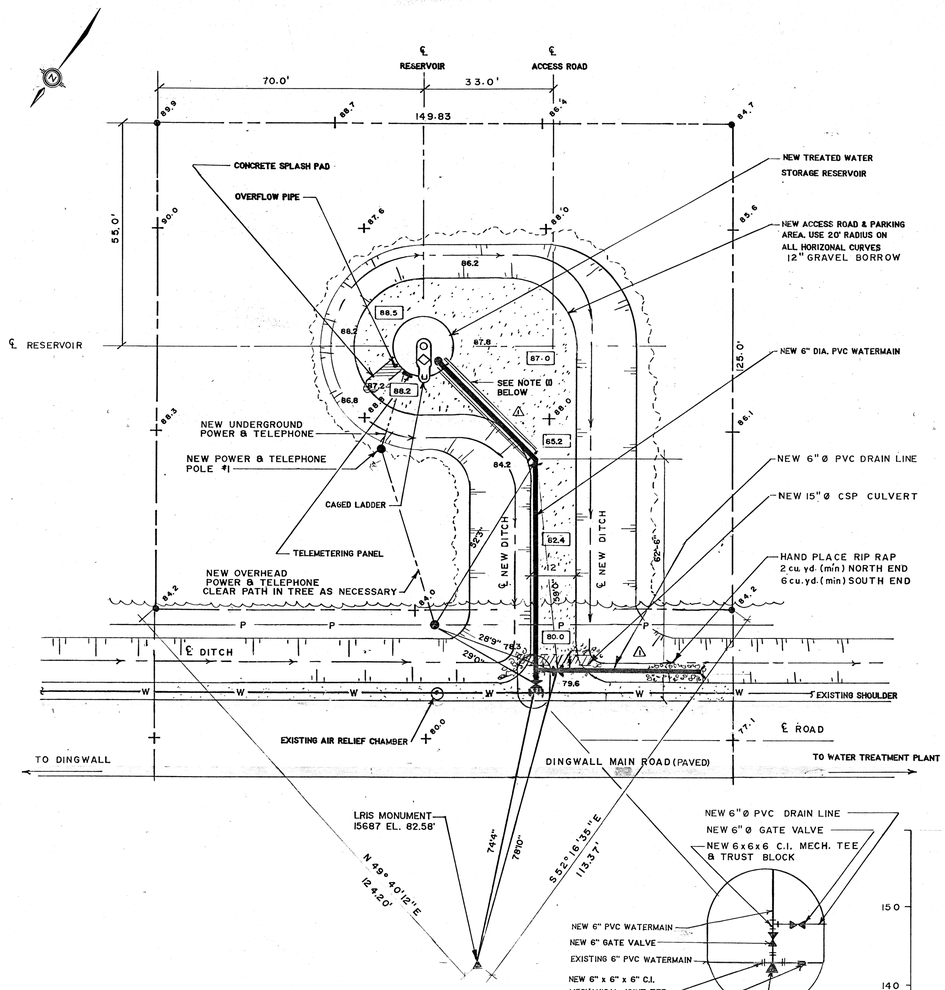

RESERVOIR SITE PLAN
SCALE : 1"=20'

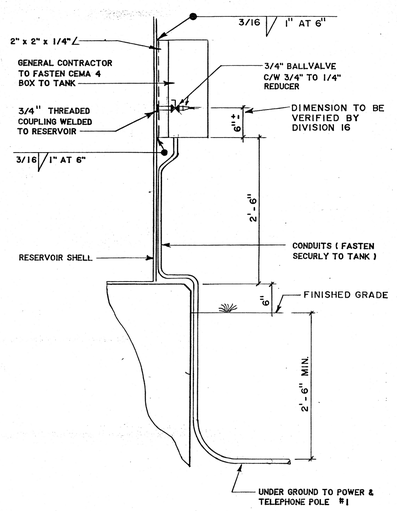

SECTION
SCALE : 3/4" = 1'-0"

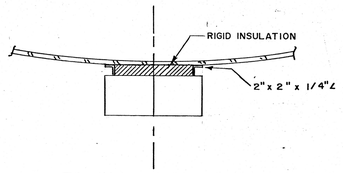

PLAN
SCALE: 3/4"=1'-0"

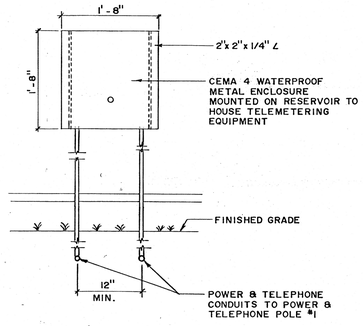

ELEVATION
SCALE: 3/4" = 1'-0"

LEGEND

- EXISTING TREE LINE
- FINISHED TREE LINE (LIMIT OF CLEARING GRUBBING & GRADING)
- 84.9 — EXISTING GRADE
- 88.9 — FINISHED GRADE
- P — EXISTING OVERHEAD POWERLINE
- W — EXISTING 6"DIA. P.V.C. WATERMAIN & AIR RELIEF CHAMBER
- NEW 12" DIA. C.M.P. CULVERT
- NEW 6" DIA. P.V.C. WATERMAIN
- T.O.F. — TOP OF FOUNDATION ELEV.
- ℄ DITCH
- PROPERTY LINE

NOTES:

(1) REMOVE TREES & CLEAR/GRUB & REMOVE TOPSOIL FROM RESERVOIR SITE , ACCESS ROAD , PARKING AREA , & DITCH ACCESS.

RESERVOIR TELEMETERING EQUIPMENT PANEL
CEMA 4 WATERPROOF BOX TO BE SUPPLIED BY DIVISION 16

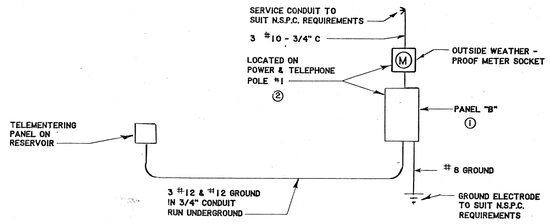

115/230 VOLT - 3Ø POWER RISER AT RESERVOIR
N.T.S.

(1) PANEL "B" - TO BE CEMA 3R WEATHERPROOF COMBINATION LOAD CENTER APPROVED FOR SERVICE ENTRANCE USE SQ. "D" CAT. No. Q08MRB C/W 1 - 30 AMP - 2 POLE MAIN BREAKE, 2 - 15A - 1 POLE BREAKERS & WEATHERPROOF HUB.

(2) LOCATE EQUIPMENT ON POLE TO SUIT N.S.P.C. STANDERD DETAILS

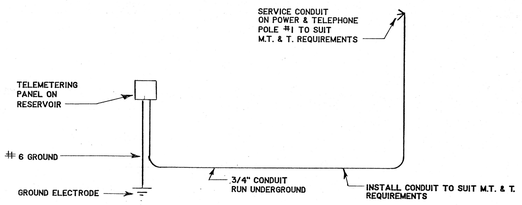

TELEPHONE RISER AT RESERVOIR
N.T.S.

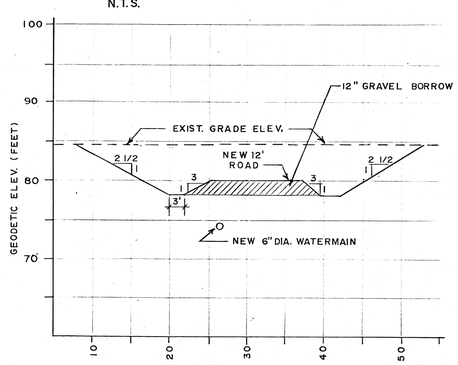

ROAD SECTION
SCALE : 1" = 10'

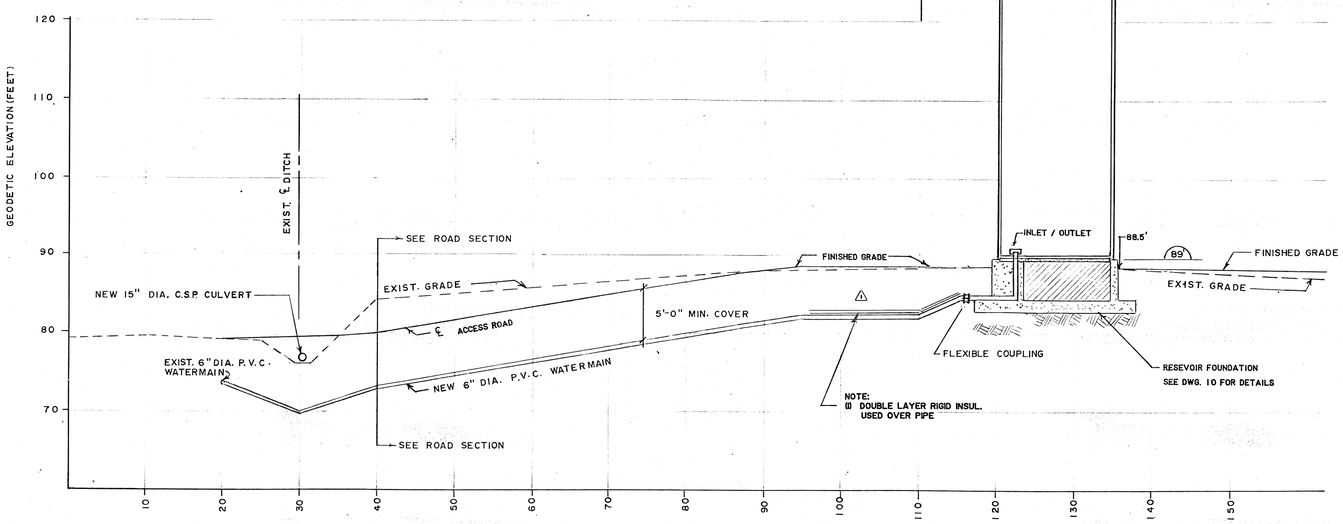

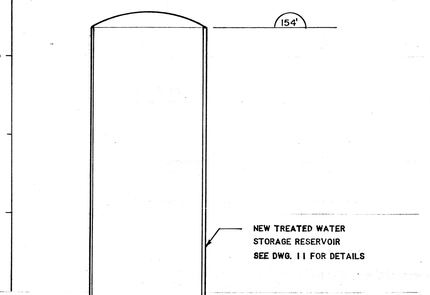

PROFILE
SCALE : 1" = 10'

NO.	DATE	DESCRIPTION	BY	CK'D.
		REVISIONS		
1	SEPT./90	AS BUILT INFORMATION ADDED	PMF	

STAMP	STAMP
REGISTERED PROFESSIONAL ENGINEER — 16 Jan 84 — M. G. TORLEY — 3865 — PROVINCE OF NOVA SCOTIA	REGISTERED PROFESSIONAL ENGINEER — W. N. HORNER, P. Eng. — PROVINCE OF NOVA SCOTIA

W. N. HORNER & ASSOCIATES
LIMITED
CONSULTING PROFESSIONAL ENGINEERS
TRURO NOVA SCOTIA

THE MUNICIPALITY OF VICTORIA
NOVA SCOTIA

DINGWALL WATER SYSTEM
IMPROVEMENTS 1989

RESERVOIR SITE PLAN & DETAILS

DRAWN BY	CHECKED BY	SCALE:	DRAWING No.
JLJ	MGT	AS NOTED	9
JOB NUMBER 88-22	DATE: DEC./88		

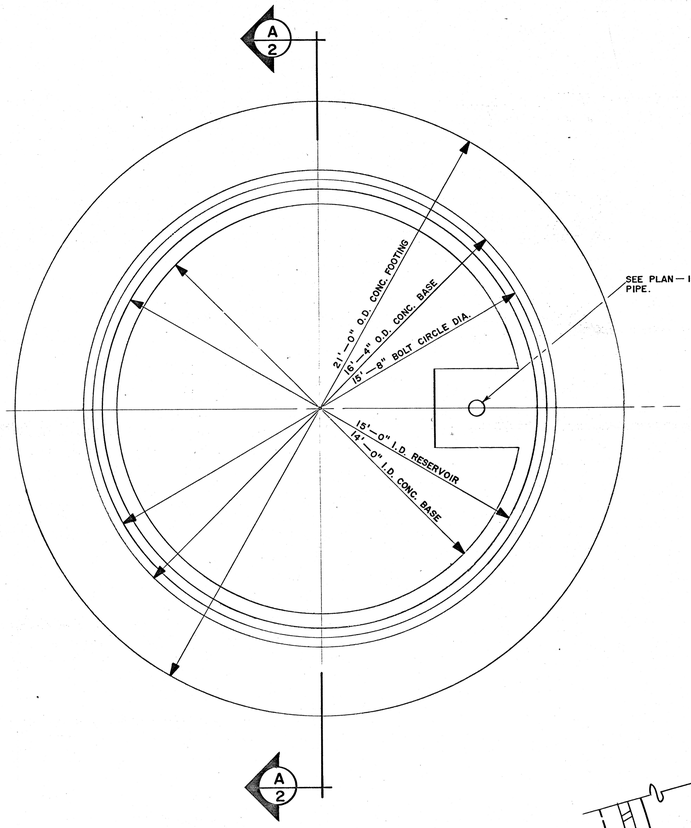

PLAN — RESERVOIR FOUNDATION

SCALE :— 3/8" = 1'—0"

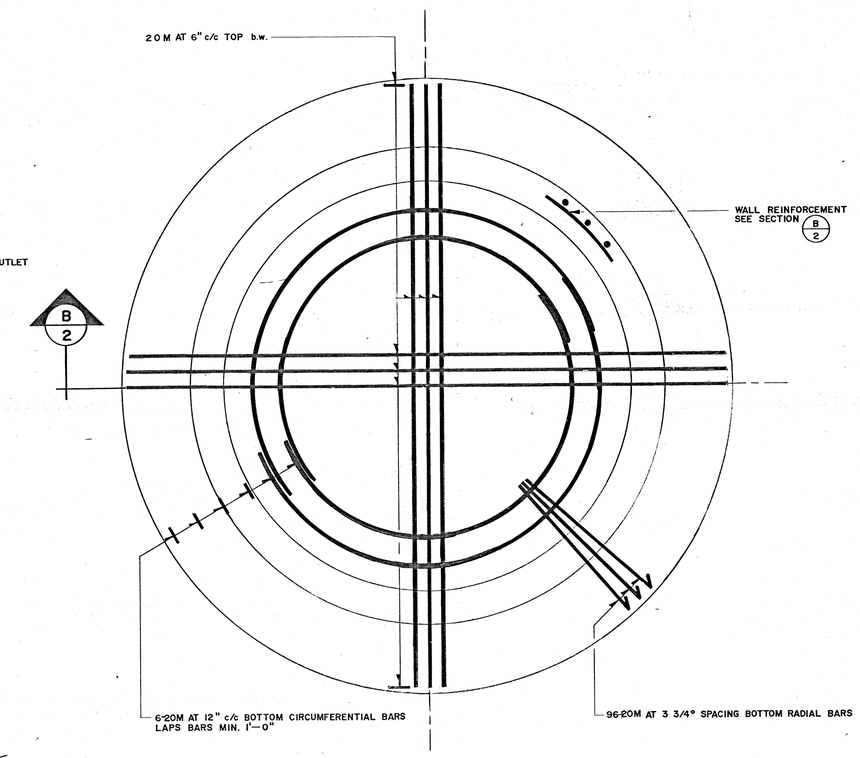

PLAN — REINFORCEMENT

SCALE :— 3/8" = 1'—0"

1. ANCHOR BOLTS SHALL BE ASTM STANDARD A325 "HIGH STRENGTH STEEL BOLTS FOR STRUCTURAL STEEL JOINTS"

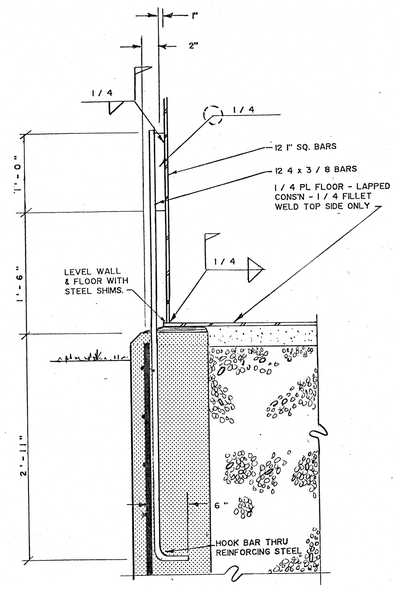

AS BUILT

N.T.S. (SEE SECTION B2 BELOW)

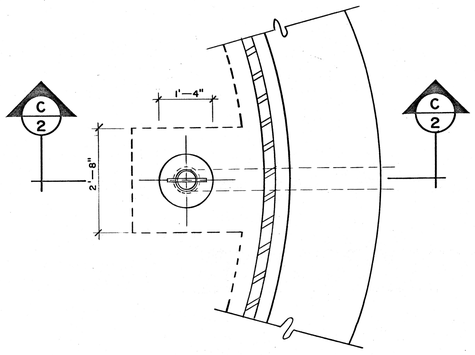

PLAN — INLET/OUTLET PIPE

SCALE :— 1/2" = 1'—0"

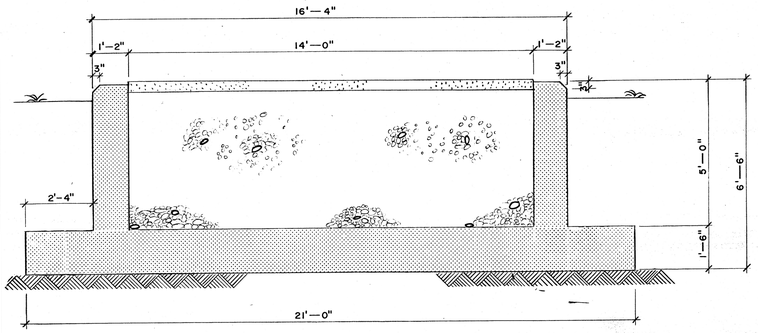

SECTION A 2

SCALE :— 3/8" = 1'—0"

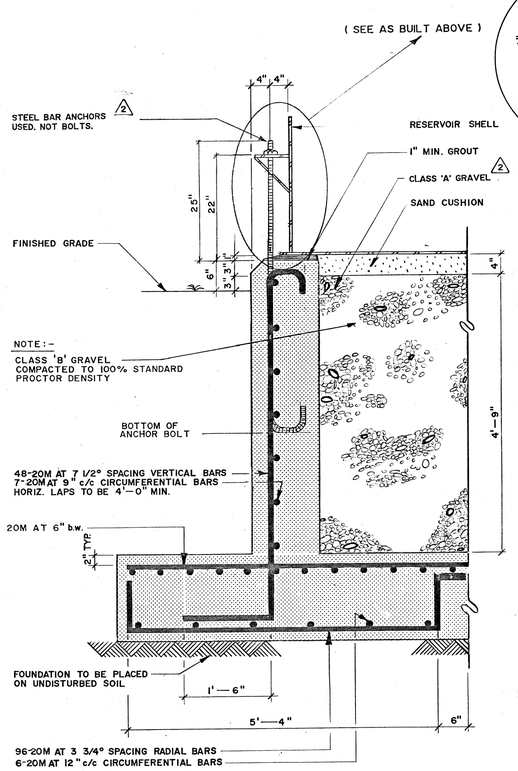

SECTION B 2

SCALE :— 3/4" = 1'—0"

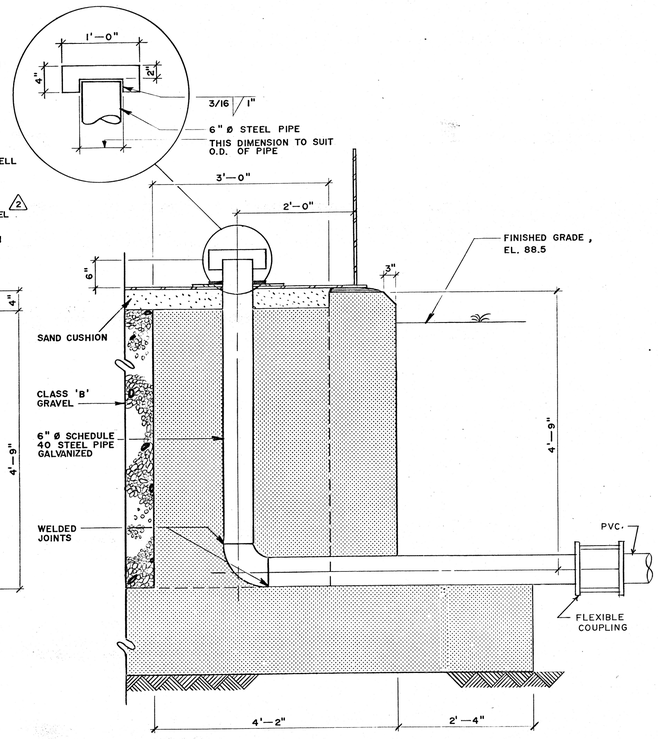

SECTION C 2

SCALE :— 3/4" = 1'—0"

No.	DATE	DESCRIPTION	BY	CK'D.
2	OCT. 1990	AS BUILT INFO. ADDED	L.J.	
1	APR. 1989	ANCHOR BOLTS, STIFFENERS & CHAIR DETAIL	D.F.	M.G.T.

REVISIONS

STAMP	STAMP
REGISTERED PROFESSIONAL ENGINEER — PROVINCE OF NOVA SCOTIA — DATE Jan 89 — M. G. TURLEY — 3865	REGISTERED PROFESSIONAL ENGINEER — W. N. HORNER, P. Eng. — PROVINCE OF NOVA SCOTIA

W. N. HORNER & ASSOCIATES
LIMITED
CONSULTING PROFESSIONAL ENGINEERS
TRURO NOVA SCOTIA

THE MUNICIPALITY OF VICTORIA
NOVA SCOTIA

DINGWALL WATER SYSTEM
IMPROVEMENTS 1989

RESERVOIR FOUNDATION PLAN

DRAWN BY	CHECKED BY	SCALE:	DRAWING No.
	MGT	AS NOTED	10
JOB NUMBER 88-22	DATE: DEC./88		

2
1

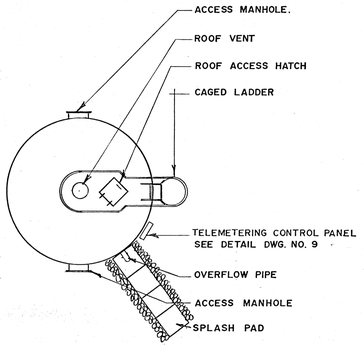

PLAN - RESERVOIR

SCALE: 1/8" = 1'-0"

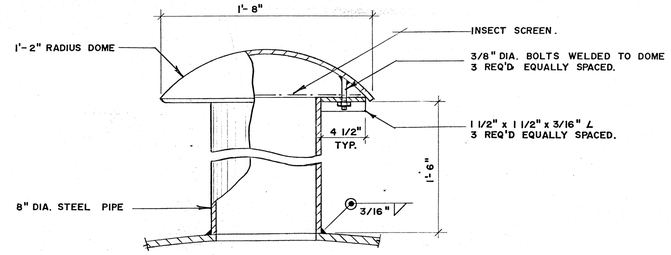

ROOF VENT DETAIL

N.T.S.

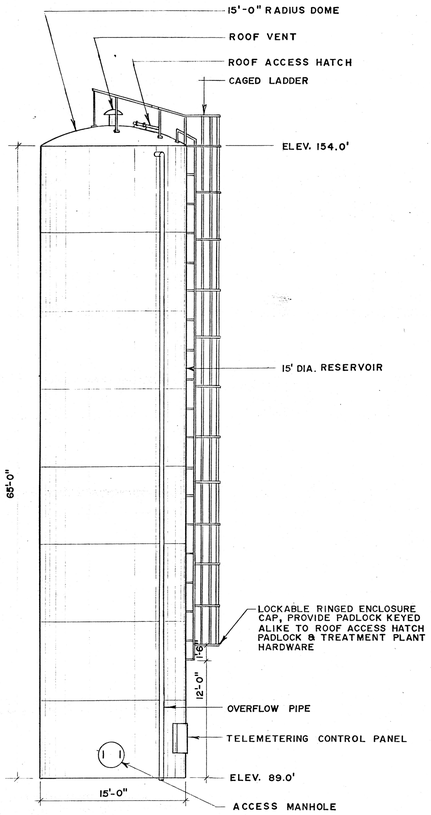

ELEVATION - RESERVOIR

SCALE: 1/8" = 1'-0"

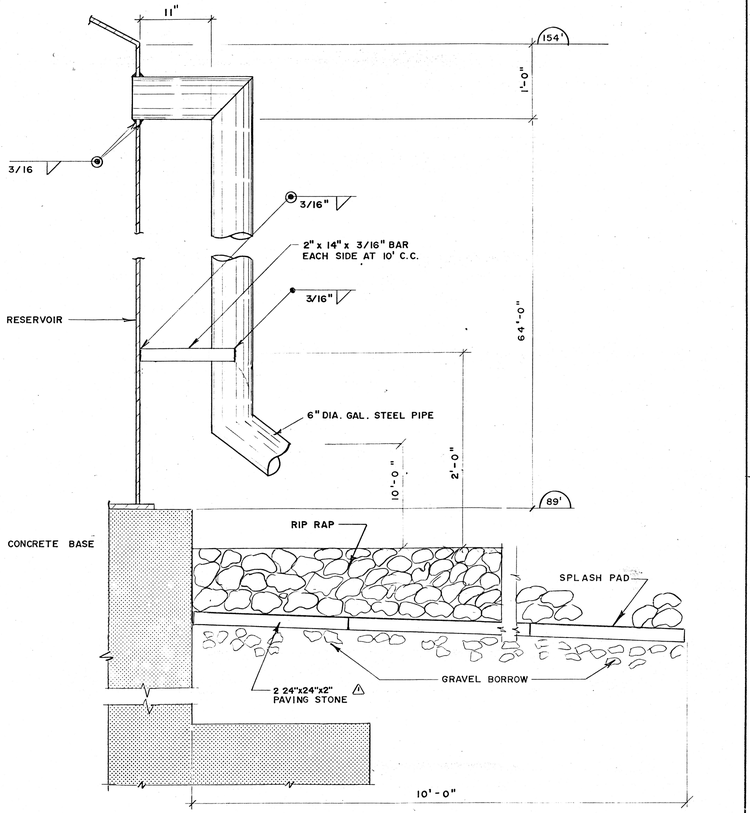

OVERFLOW PIPE DETAIL

SCALE: 1"=1'-0"

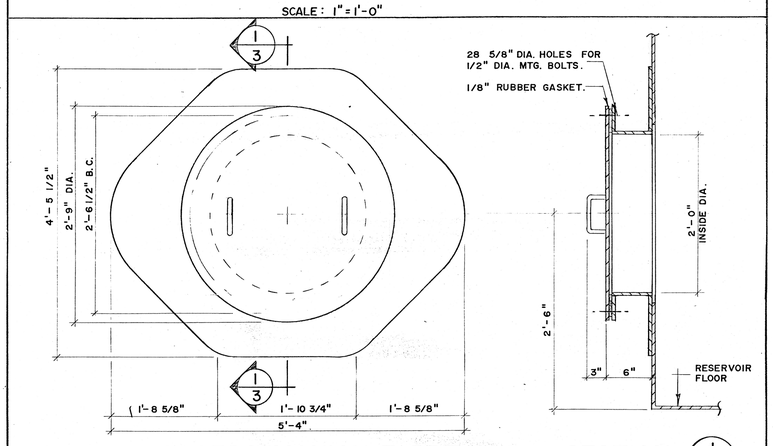

ACCESS MANHOLE DETAIL

SCALE: 1"=1'-0"

SECTION 1/3

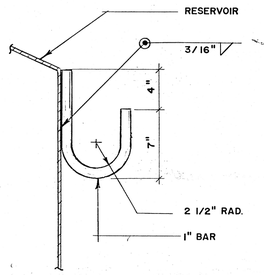

6 HOOKS SHALL BE LOCATED AT 7'-10" CENTRES AROUND PERIMETER OF TANK.

SCAFFOLD HOOK DETAIL

SCALE: 1 1/2"=1'-0"

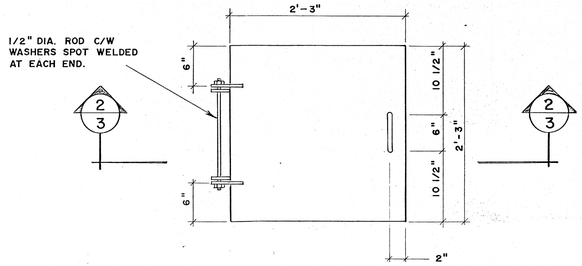

PLAN

SCALE: 1" = 1'-0"

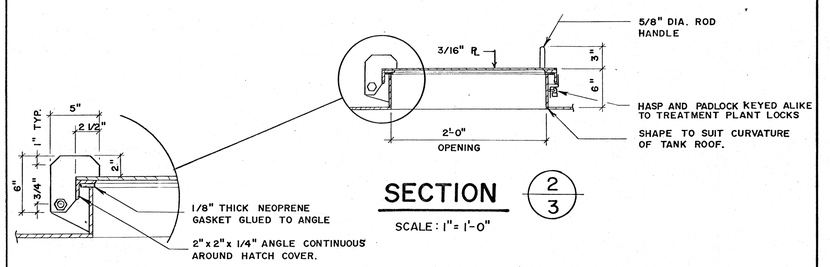

SECTION 2/3

SCALE: 1"= 1'-0"

ROOF ACCESS HATCH DETAIL

SCALE: 1" = 1'-0"

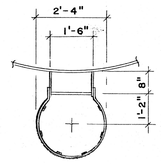

PLAN

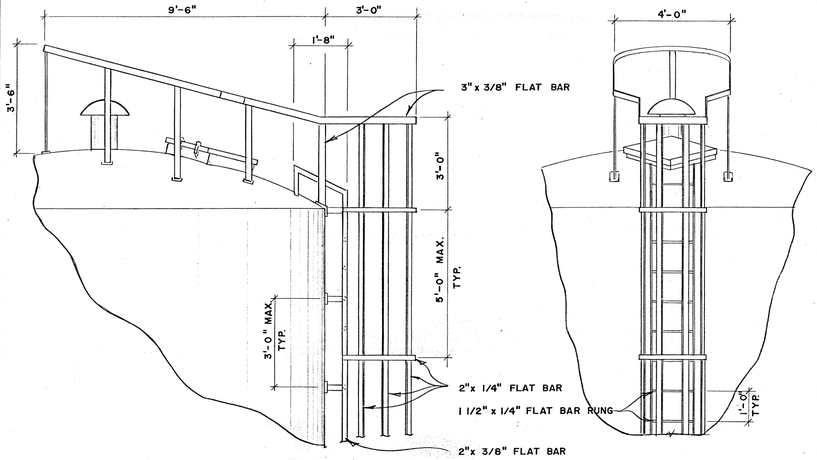

PARTIAL ELEVATIONS

SCALE: 3/8" = 1'-0"

CAGED LADDER DETAIL

SCALE: 3/8" = 1'-0"

NO.	DATE	DESCRIPTION	BY	CK'D.
1	OCT. 1990	AS BUILT INFO. ADDED	L.J.	

REVISIONS

STAMP	STAMP
REGISTERED PROFESSIONAL ENGINEER — DATE Jan 91 — M. G. TOPLEY — L — 3865 — PROVINCE OF NOVA SCOTIA	REGISTERED PROFESSIONAL ENGINEER — W. HORNER P. E. — PROVINCE OF NOVA SCOTIA

W. N. HORNER & ASSOCIATES
LIMITED
CONSULTING PROFESSIONAL ENGINEERS
TRURO NOVA SCOTIA

THE MUNICIPALITY OF VICTORIA
NOVA SCOTIA

WATER SYSTEM IMPROVEMENTS
DINGWALL, N.S.

RESERVOIR DETAILS

DRAWN BY	CHECKED BY	SCALE:	DRAWING No.
	MGT	AS NOTED	11
JOB NUMBER 88-22	DATE: DEC./88		

Attachment A – Lead Report

ALL-TECH
ENVIRONMENTAL SERVICES LIMITED

Lead Materials Assessment
Old Dingwall Water Tower

244 Dingwall Road
Dingwall
Nova Scotia

Prepared For:

Strait Engineering
298 Reeves Street
Port Hawkesbury, NS
B9A 2B4

ATTN: Darryl Myette

May 7th, 2025

ALL-TECH Project No. S-4627

ALL-TECH Environmental Services Limited, 45 Wabana Court, Suite 128, Sydney, NS, B1P 0B9
Phone: 902.539.3012 Fax: 902.539.3381 Web: http://www.toalltech.com

DARTMOUTH, NS SYDNEY, NS STELLARTON, NS SAINT JOHN, NB MONCTON, NB BELLEDUNE, NB
MIRAMICHI, NB CHARLOTTETOWN, PE ST. JOHN'S, NL CORNER BROOK, NL GANDER, NL

1.0 INTRODUCTION

ALL-TECH Environmental Services Limited was contracted by Strait Engineering Ltd. (SEL) to perform Lead Bulk Sampling on the older water tower located at 244 Dingwall Road, Dingwall, Nova Scotia. The audit was conducted to determine if any of lead was present within the paint.

The audit was performed on May 1, 2025, by Kathleen Whelan of ALL-TECH Environmental Services Limited.

2.0 LEAD ASSESSMENT

Lead is a naturally occurring metal that is present throughout the environment in rocks, soil, water and air. It has been used as a pigment in many paints for centuries, and in some applications, it is still used today. From an occupational health standpoint, intact dry lead paint or particles pose little hazard, but a serious hazard can be created when lead coatings or demolished structures are disturbed. Construction workers who weld, cut or blast structural steel coated with lead-based paint or demolish painted surfaces with lead paint are at significant risk of lead poisoning.

Representative paint chips were collected from various areas on the exterior of the older water tower and placed in a proper sampling container. The paint sample was submitted to and analyzed by EMSL Canada, an independent 3rd party laboratory located in Mississauga, Ontario, for lead content analysis. Results of lead analyses are presented in Table 2.0.

2.1 APPLICABLE STANDARDS

The Nova Scotia Department of Labour and Workforce Development define lead containing materials as materials containing 0.1% (1,000 mg/kg) lead or greater by weight. The Nova Scotia Department of Environment's maximum concentration for lead in contaminated soil is 1000 mg/kg. If it is found that the lead content is greater than this limit, a lead leachate test should be performed.

In the Province of Nova Scotia disposal of contaminated waste falls under the following guideline: *Nova Scotia Department of Environment Guidelines for Disposal of Contaminated Solids in Landfills.* The province sets the accepted parameters for leachable lead in contaminated soil at 5 mg/L. If lead contaminant levels are less than or equal to 5 mg/L, the material is acceptable for disposal in landfills. If the levels are greater than 5 mg/L, the material is considered to be hazardous waste and can only be disposed of in a designated hazardous waste secure landfill.

2.2 LEAD PAINT ANALYSIS RESULTS

See Table 2.0 for a summary of lead analyses results.

Table 2.0
Summary of Laboratory Lead Analyses Results
Old Dingwall Water Tower

Sample No. *(Lab ID)*	**Description/Location**	**Results by Weight (mg/kg)**	**NSDOE Guideline (mg/kg)**
Pb-01 (*552508104-0001*)	Old Water Tower – Blue Paint	<64	**1000**

Results of the analyses indicate that sample Pb-01 does not contain lead greater than the regulatory limit. Nova Scotia's Department of Labour and Advanced Education has currently set the regulatory limit for lead containing materials at 1000 mg/kg or greater.

4.0 ASSUMPTIONS AND LIMITATIONS

The following assumptions and limitations for the Lead Material Assessment as performed by ALL-TECH Environmental Services are outlined below:

- Representative sampling was performed on the materials within the above noted areas and it is assumed that any other materials having the same properties, qualities or components as the sampled materials will have similar analytical results.
- Where possible, non-destructive sampling techniques were utilized for paint sampling. Assumptions are made based on the analytical results of the hazardous materials sampled.

The results presented in this report are indicative of the observations recorded during the time of the site visits. The opinions contained within this report are based on accepted professional principles but should not be interpreted as legal advice or as a guarantee or warranty regarding potential liability associated with conditions at the site. Any use that a third party makes of this report, or any reliance on, or final decisions made based upon it, are the responsibility of the third party. ALL-TECH accepts no responsibility for damages suffered by third parties as a result of decisions made based on this report.

If you have any questions and/or comments regarding this report, please do not hesitate to contact us at (902) 539-3012.

Many thanks,

Kathleen Whelan, B.Tech., BET
Environmental Technologist
ALL-TECH Environmental Services Limited

Appendix 1 – Laboratory Results

EMSL Canada Inc.
2756 Slough Street, Mississauga, ON L4T 1G3
Phone/Fax: (289) 997-4602 / (289) 997-4607
http://www.EMSL.com torontolab@emsl.com

EMSL Canada Or	552508104
CustomerID:	55ATES44B
CustomerPO:	S-4627
ProjectID:	

Attn: **Jocelyn MacDonald**
All-Tech Environmental (Cape Breton)
45 Wabana Curt
Suite 128
Sydney, NS B1P 0B9

Phone:	(902) 539-3012
Fax:	(902) 539-3381
Received:	5/5/2025 03:03 PM
Collected:	5/1/2025

Project: **Dingwall Water Tower S-4627**

Test Report: Lead in Paint Chips by Flame AAS (SW 846 3050B/7000B)*

Client SampleDescription	*Collected*	*Analyzed*	*Weight*	*RDL*	*Lead Concentration*
Pb-01	5/1/2025	5/6/2025	0.2559 g	64 ppm	<64 ppm
552508104-0001	Site: Old Water Tower				

Rowena Fanto, Lead Supervisor
or other approved signatory

EMSL maintains liability limited to cost of analysis. Interpretation and use of test results are the responsibility of the client. This report relates only to the samples reported above, and may not be reproduced, except in full, without written approval by EMSL. EMSL bears no responsibility for sample collection activities or analytical method limitations. The report reflects the samples as received. Results are generated from the field sampling data (sampling volumes and areas, locations, etc.) provided by the client on the Chain of Custody. Samples are within quality control criteria and met method specifications unless otherwise noted. * Analysis following Lead in Paint by EMSL SOP/Determination of Environmental Lead by FLAA. Reporting limit is 0.0064% wt based on the minimum sample weight per our SOP. "<" (less than) result signifies the analyte was not detected at or above the reporting limit. Measurement of uncertainty is available upon request. Definitions of modifications are available upon request.

Samples analyzed by EMSL Canada Inc. Mississauga, ON AIHA LAP, LLC-ELLAP Accredited #196142

Initial report from 05/07/2025 09:54:56